DC COURTS INTERIOR ALTERATION

GENERAL NOTES

1. THE REQUIREMENTS OF THE CONTRACT DOCUMENTS INCLUDE FURNISHING ALL LABOR AND MATERIALS TO COMPLETE THE PROJECT AS DESCRIBED BY THE DOCUMENTS. THE CONTRACT DOCUMENTS SHALL INCLUDE THE OWNER/CONTRACTOR AGREEMENT, GENERAL CONDITIONS, THE DRAWINGS, SPECIFICATIONS, AND ALL ADDENDA AND REVISIONS, UNLESS OTHERWISE AGREED TO THE GENERAL CONDITIONS SHALL BE AIA DOCUMENT A201, LATEST EDITION.

2. ALL WORK SHALL MEET OR EXCEED ALL APPLICABLE CODES, REGULATIONS, ORDINANCES, ETC. OF THE AUTHORITY HAVING JURISDICTION AND SHALL CONFORM WITH THE RULES AND REGULATIONS OF OSHA. UNLESS OTHERWISE AGREED TO, THE CONTRACTOR SHALL BE RESPONSIBLE FOR FILING, PURCHASING AND OBTAINING ALL REQUIRED PERMITS, INSPECTIONS, AND FINAL WRITE-OFFS AT THE PROJECT COMPLETION. THE CONTRACTOR SHALL ARRANGE FOR ALL INSPECTIONS NECESSARY TO OBTAIN A CERTIFICATE OF OCCUPANCY.

3. THE CONTRACTOR SHALL VISIT AND EXAMINE THE PROJECT SITE TO BECOME FAMILIAR WITH ALL EXISTING CONDITIONS. THE CONTRACTOR SHALL REVIEW THE CONSTRUCTION DOCUMENTS AND VERIFY DIMENSIONS AND ACTUAL FIELD CONDITIONS. ANY CONFLICTS/OMISSIONS OR DISCREPANCIES BETWEEN THE ACTUAL FIELD CONDITIONS AND THE CONSTRUCTION DOCUMENTS, OR ANY DISCREPANCIES WITHIN THE CONSTRUCTION DOCUMENTS THEMSELVES, SHALL BE BROUGHT TO THE ATTENTION OF THE ARCHITECT, IN WRITING, THREE (3) BUSINESS DAYS BEFORE RETURN OF BID. DRAWINGS OF EXISTING CONDITIONS ARE BASED UPON EXISTING BUILDING DRAWINGS OBTAINED THROUGH THE OWNER AND ON LIMITED FIELD OBSERVATION BY THE ARCHITECT. ACTUAL FIELD CONDITIONS MAY VARY FROM THAT SHOWN IN THE CONSTRUCTION DOCUMENTS.

4. ANY CONFLICTS FOUND IN THE CONSTRUCTION DOCUMENTS OR ANY APPARENT ERRORS OR OMISSIONS SHALL BE BROUGHT TO THE ATTENTION OF THE ARCHITECT. IN INSTANCES OF CONFLICT BETWEEN THE ARCHITECTURAL DRAWINGS AND THE ENGINEERING DRAWINGS FOR LOCATIONS OF MATERIALS AND EQUIPMENT, THE ARCHITECTURAL DRAWINGS SHALL TAKE PRECEDENCE. FOR DISCREPANCIES NOT BROUGHT TO THE ATTENTION OF THE ARCHITECT IT WILL BE ASSUMED THAT THE CONTRACTOR HAS BID THE MORE EXPENSIVE METHOD OF CONSTRUCTION.

5. PRIOR TO COMMENCEMENT OF WORK THE CONTRACTOR SHALL VERIFY THAT THEIR DRAWINGS AND SPECIFICATIONS ARE THE LATEST ISSUE.

6. DO NOT SCALE DRAWINGS. IF ADDITIONAL INFORMATION OR DIMENSIONS ARE REQUIRED, CONTACT THE ARCHITECT. DIMENSIONS NOTED AS (+\-) OR "FIELD VERIFY" ARE DIMENSIONS THAT MUST BE CONFIRMED IN THE FIELD. ALL DIMENSIONS INDICATED ON THE DRAWINGS ARE FROM FINISHED FACE TO FINISHED FACE U.N.O.:

7. ALL EXISTING ITEMS NOT SHOWN OR NOT INDICATED AS PART OF THE WORK ARE TO REMAIN.

8. ALLOW FOR PATCHING AND MISCELLANEOUS REPAIR WORK TO TIE NEW WORK INTO OLD. PATCHED SURFACES SHALL MATCH EXISTING AND MAINTAIN STC AND UL FIRE RATINGS, V.I.F. WHERE EXISTING SURFACES ARE PATCHED, THE ENTIRE SURFACE - NOT ONLY THE PATCH - SHALL BE REFINISHED. PATCH, REPAIR AND PAINT ALL EXISTING WALLS TO REMAIN AS REQUIRED BY THE CONSTRUCTION, BY DAMAGE DURING CONSTRUCTION, AND BY THE SCOPE OF WORK.

9. THE CONTRACTOR IS RESPONSIBLE FOR ALL CONSTRUCTION MEANS, METHODS, TECHNIQUES, SEQUENCE, PROCEDURES, AND COORDINATION OF ALL WORK PERFORMED UNDER HIS SUPERVISION INCLUDING WORK PERFORMED BY HIS SUBCONTRACTORS.

10. ALL ITEMS REQUIRED BY THESE DRAWINGS BUT NOT SPECIFIED SHALL MATCH BUILDING STANDARD.

11. THE CONTRACTOR SHALL PROVIDE AND MAINTAIN THE NECESSARY COVERINGS, BOARDS, TEMPORARY PARTITIONS, AND DOORS AS REQUIRED TO PROTECT NEW AND EXISTING WORK, MATERIALS, AND FINISHES ALREADY IN PLACE. ANY AREAS IN THE BUILDING DAMAGED DURING CONSTRUCTION SHALL BE REPAIRED TO THEIR ORIGINAL CONDITION BY THE CONTRACTOR AT THEIR EXPENSE.

12. NO WORK AND/OR CONSTRUCTION OPERATIONS SHALL BE PERFORMED THAT WILL UNDERMINE THE STRUCTURAL INTEGRITY OF THE BUILDING. THE CONTRACTOR WILL BE RESPONSIBLE FOR ADEQUATELY BRACING AND PROTECTING THE WORK DURING CONSTRUCTION AGAINST DAMAGE, BREAKAGE, COLLAPSE, DISTORTION, AND/OR MISALIGNMENT IN ACCORDANCE WITH ALL APPLICABLE CODES, STANDARDS, AND GOOD PRACTICE.

13. THE CONTRACTOR SHALL VERIFY AND COORDINATE ALL FIELD CONDITIONS AND LAYOUT THE PROPOSED PARTITIONS FOR REVIEW BY THE ARCHITECT AND OWNER/TENANT FOR GENERAL COMPLIANCE WITH THE DESIGN INTENT. INSTALLATION OF STUDS SHALL NOT PROCEED WITHOUT THIS REVIEW AND APPROVAL. APPROVAL BY THE ARCHITECT AND OWNER/TENANT DOES NOT RELEASE THE CONTRACTOR FROM THE RESPONSIBILITY TO MAINTAIN CRITICAL DIMENSIONS AND CLEARANCES.

14. AFTER COMPLETION OF ALL WORK THE CONTRACTOR SHALL BE RESPONSIBLE FOR PROVIDING COMPLETE ARCHITECTURAL AND MEP AS-BUILT DRAWINGS.

15. ALL ABANDONED OR UNUSED EXISTING SWITCHES, PLUGS, OUTLETS, AND JUNCTION BOXES SHALL BE REMOVED AND HOLES PATCHED W/ GYP. BD. TO MATCH ADJACENT SURFACES. NO BLANK COVERS WILL BE ACCEPTED.

16. SUBSTITUTIONS, REVISIONS, OR CHANGES MUST BE SUBMITTED TO THE ARCHITECT FOR REVIEW AND APPROVAL IN ACCORDANCE WITH SPECIFIED PROCEDURES PRIOR TO PURCHASE, FABRICATION, OR INSTALLATION. REQUESTS FOR SUBSTITUTION OF SPECIFIED ITEMS SHALL BE SUBMITTED WITHIN TEN (10) DAYS OF CONTRACT AWARD AND WILL BE CONSIDERED ONLY IF THE SUBSTITUTION ITEM PROVIDES EQUAL BETTER PERFORMANCE, HAS A MORE ADVANTAGEOUS DELIVERY DATE, AND WHERE THERE IS NO SACRIFICE IN QUALITY, APPEARANCE, OR FUNCTIONALITY. IT IS THE SOLE DISCRETION OF THE ARCHITECT TO DETERMINE IF THE PROPOSED SUBSTITUTION IS ACCEPTABLE.

17. FOR A PERIOD OF ONE YEAR FROM THE DATE OF CONSTRUCTION COMPLETION AND ACCEPTANCE BY THE OWNER, THE CONTRACTOR SHALL ADJUST, REPAIR, OR REPLACE, AT NO COST TO THE OWNER, ANY EQUIPMENT, MATERIALS, OR WORKMANSHIP FOUND TO BE DEFECTIVE.

18. THE CONTRACTOR SHALL COORDINATE AND SCHEDULE WORK TO BE PERFORMED BY OTHERS AND SHALL COORDINATE EXACT LOCATIONS AND DO ALL NECESSARY CONSTRUCTION, CUTTING, FITTING, AND PATCHING THAT MAY BE REQUIRED TO FACILITATE THE WORK PERFORMED BY OTHERS AS INDICATED IN THE CONTRACT DOCUMENTS.

19. IDENTIFY ALL LONG-LEAD ITEMS THAT MAY ADVERSELY IMPACT THE CONSTRUCTION SCHEDULE. BY TENDERING HIS BID THE CONTRACTOR WARRANTS THAT ALL OF THE ITEMS SPECIFIED IN THE CONTRACT DOCUMENTS WILL BE READILY AVAILABLE AND THAT NO SUBSTITUTIONS WILL BE ALLOWED FOR AN ITEM THAT WAS NOT IDENTIFIED BY THE CONTRACTOR AS "LONG-LEAD" AT THE TIME OF BID SUBMISSION.

20. THE FOLLOWING LIST OF WORK ITEMS SHALL BE COORDINATED WITH THE OWNER: SCHEDULING OF TIME AND LOCATIONS FOR DELIVERIES, COORDINATION OF BUILDING ACCESS, THE USE AND CLEARANCE OF AVAILABLE ELEVATORS. THE CONTRACTOR SHALL DETERMINE THE EXTENT OF, MAKE ARRANGEMENTS FOR, AND INCLUDE IN THEIR BID FOR: HOISTING, CARTING, ELEVATOR SERVICE STANDARD, AND OVERTIME SERVICES BY THE OWNER.

21. WORK AREAS SHALL BE MAINTAINED IN A SECURE AND LOCKABLE CONDITION DURING CONSTRUCTION. PROVIDE, WHERE NECESSARY, TEMPORARY LOCKABLE DOORS AND KEYS TO MAINTAIN CONSTANT ACCESS AND SECURITY FOR THE TENANT TO SPACES NOT UNDER CONSTRUCTION. TO BE REVIEWED AND APPROVED BY THE TENANT PRIOR TO IMPLEMENTATION.

22. ALL MANUFACTURED ARTICLES, MATERIALS, AND/OR EQUIPMENT SHALL BE INSTALLED CONNECTED, ERECTED, CLEANED, FINISHED, AND CONDITIONED PER MANUFACTURER'S INSTRUCTIONS BY THE APPROPRIATE SUBCONTRACTOR UNDER THE GENERAL CONTRACTOR'S SUPERVISION. IN CASE OF A DISCREPANCY BETWEEN THE MANUFACTURER'S INSTRUCTIONS AND THE CONTRACT DOCUMENTS, THE CONTRACTOR SHALL OBTAIN CLARIFICATION FROM THE ARCHITECT PRIOR TO PROCEEDING WITH THE WORK.

23. IMMEDIATELY PRIOR TO THE OWNER'S OCCUPANCY THE CONTRACTOR SHALL THOROUGHLY CLEAN ALL SURFACES OF DUST, DEBRIS, LOOSE CONSTRUCTION MATERIAL, AND SHALL LEAVE FLOORS VACUUMED AND CLEAN. THE CONTRACTOR SHALL CLEAN WINDOWS, AND BLINDS (UNLESS PREVIOUSLY BAGGED) AND SHALL VACUUM THE INSIDE OF ANY INDUCTION UNIT ENCLOSURES OR OTHER EQUIPMENT AFFECTED BY CONSTRUCTION ACTIVITY.

24. U.N.O. ALL ROOF PENETRATIONS SHALL BE ADEQUATELY PATCHED, FLASHED, AND SEALED IN ACCORDANCE WITH THE NATIONAL ROOFING CONTRACTOR'S ASSOCIATION'S (NRCA) GUIDELINES AND DETAILS, MOST RECENT EDITION AND AS REQUIRED TO MAINTAIN ANY EXISTING ROOF WARRANY.

25. WORK UNDER SEPARATE CONTRACTS; COOPERATE FULLY WITH SEPARATE CONTRACTORS SO WORK ON THOSE CONTRACTS MAY BE CARRIED OUT SMOOTHLY, WITHOUT INTERFERING WITH OR DELAYING WORK UNDER THIS CONTRACT OR OTHER CONTRACTS. COORDINATE THE WORK OF THIS CONTRACT WITH WORK PERFORMED UNDER SEPARATE CONTRACTS. OWNER WILL AWARD SEPARATE CONTRACT(S) FOR THE FOLLOWING CONSTRUCTION OPERATIONS AT PROJECT SITE THAT WILL BE CONDUCTED SIMULTANEOUSLY WITH WORK UNDER THIS CONTRACT: AV SYSTEM DESIGN AND INSTALLATION; TELEPHONE AND IT SYSTEM DESIGN AND INSTALLATION, SECURITY SYSTEM DESIGN AND INSTALLATION.

26. WORK AND EQUIPMENT PROVIDED BY OWNER. THE OWNER MAY FURNISH CERTAIN ITEMS OF EQUIPMENTS TO CONTRACTOR FOR INSTALLATION UNDER THIS CONTRACT. THESE ITEMS SHALL BE AS INDICATED ON DRAWINGS AND NUMBERED FOR IDENTIFICATION PURPOSES. CONTRACTOR SHALL PROVIDE IN CONTRACT PRICE OF SUM SUFFICIENT TO COVER COST OF SUCH INSTALLATION WHICH INCLUDES ROUGHING IN, UNLOADING, UNCRATING, STORING, PROTECTION, ASSEMBLING, SETTING IN PLACE AND MAKING FINAL CONNECTIONS TO EQUIPMENT BY OWNER.

ABBREVIATIONS

A	AMP	ID	INSIDE DIAMETER
A/C	AIR CONDITIONING	INSUL	INSULATE(D), (ING)
ACM	ASBESTOS CONTAINING MATERIAL	INT	INTERIOR
ACT	ACOUSTIC CEILING TILE	KD	KNOCK DOWN FRAME
ADJ	ADJUSTABLE	LAM	LAMINATED
AFF	ABOVE FINISHED FLOOR	LAV	LAVATORY
AL (ALUM)	ALUMINUM	LF	LINEAR FOOTAGE
ALT	ALTERNATE	L.P.	LOW POINT
ANOD	ANODIZED	M	METER
AOW	AREA OF WORK	MAS	MASONRY
ARCH	ARCHITECT(URAL)	MAX	MAXIMUM
AWG	AMERICAN WIRE GAUGE	MCB	MAIN CIRCUIT BREAKER
BD	BOARD	MECH	MECHANIC(AL)
BITUM	BITUMINOUS	MED	MEDIUM
BLDG	BUILDING	MFG	MANUFACTURE(R)
BLK(G)	BLOCK(ING)	MIN	MINIMUM
B.O.	BOTTOM OF	MISC	MISCELLANEOUS
BRKR	BREAKER	MM	MILLIMETER
BRNG	BEARING	MO	MASONRY OPENING
BS	BOTH SIDES	MR	MOISTURE RESISTANT
BW(EW)	BOTH WAYS	MTG	MEETING OR MOUNTING
CF	CUBIC FOOT	MTL (MET)	METAL
CFM	CUBIC FEET PER MINUTE	NIC	NOT IN CONTRACT
CJ	CONTROL JOINT	NOM	NOMINAL
CKT	CIRCUIT	NRC	NOISE REDUCTION COEFFICIENT
CL	CENTER LINE	NTS	NOT TO SCALE
CLG	CEILING	OC	ON CENTER(S)
CMU	CONCRETE MASONRY UNIT	OD	OUTSIDE DIAMETER
CO	CONTRACTING OFFICER	OPNG	OPENING
COL	COLUMN	OPP	OPPOSITE
CONC	CONCRETE	OWSJ	OPEN WEB STEEL JOIST
CONT	CONTINUOUS, CONTINUE	PAI	PERMIT AUTHORIZING INDIVIDUAL
COR	CONTRACTING OFFICER	PBD	PARTICLE BOARD
	REPRESENTATIVE	PC	PRE-CAST
COTR	CONTRACTING OFFICER	PH	PHASE
	TECHNICAL REPRESENTATIVE	PL.LAM.	PLASTIC LAMINATE
CT	CERAMIC TILE	PLAS.	PLASTER
CR	CARPET REDUCER	PLYWD	PLYWOOD
CY	CUBIC YARD	PT	PRESSURE TREATED
DEMO	DEMOLISH, DEMOLITION	PNTD	PAINTED
DF	DRINKING FOUNTAIN	PVC	POLYVINYL CHLORIDE
DR	DOOR	QT	QUARRY TILE
DS	DOWN SPOUT	R	RISER
DTL	DETAIL	R&S	RAIL & STILE
DWG	DRAWING	RAF	RAISED ACCESS FLOORING
E OR (E)	EXISTING	RD	ROOF DRAIN
E/R	EXISTING RELOCATED	REINF	REINFORCE(D), (ING)
EA.	EACH	REQ'D	REQUIRED
EL	ELEVATION	RM	ROOM
ELEC	ELECTRIC(AL)	RMV	REMOVE
EQ	EQUAL	RO	ROUGH OPENING
ES	ELASTOMERIC SEALANT	RTU	ROOF TOP UNIT
ETR	EXISTING TO REMAIN	SB	SPLASH BLOCK
EWC	ELECTRIC WATER COOLER	SC	SOLID CORE
EXH	EXHAUST	SF	SQUARE FOOTAGE
EXIST	EXISTING	SHT	SHEET
EXT	EXTERIOR	SIM	SIMILAR
FD	FLOOR DRAIN	SPEC	SPECIFICATION(S)
FE	FIRE EXTINGUISHER	SQ	SQUARE
FF	FINISHED FLOOR	SS	STAINLESS STEEL
FL	FLOOR(ING)	STC	SOUND TRANSMISSION COEFF.
FLASH'G	FLASHING	STD	STANDARD
FLUOR	FLUORESCENT	STL	STEEL
FOW	FACE OF WALL	STRUCT	STRUCTURAL
FP	FIREPROOF	T	TREAD
FRT	FIRE RETARDANT	T&G	TONGUE AND GROOVE
FTG	FOOTING	T.O	TOP OF
GA	GAGE (GAUGE)	TELE	TELEPHONE
GALV	GALVANIZED	THK	THICK(NESS)
GB	GRAB BAR	TYP	TYPICAL
GC	GENERAL CONTRACTOR	UL	UNDERWRITER'S LAB
GF	GOVERNMENT FURNISHED	UNO	UNLESS NOTED OTHERWISE
GFCI	GROUND FAULT	UON	UNLESS OTHERWISE NOTED
	CIRCUIT INTERRUPT or	USG	UNITED STATES GOVERNMENT
	GOVERNMENT FURNISHED	VCT	VINYL COMPOSITE, TILE
	CONTRACTOR INSTALLED	VERT	VERTICAL
GI	GOVERNMENT INSTALLED	VIF	VERIFY IN FIELD
GL	GLASS, GLAZING	VTC	VIDEO TELECONFERENCING
GOVT	GOVERNMENT	W	WIRE
GWB	GYPSUM WALL BOARD	W/	WITH
GYP.BD.	GYPSUM BOARD	WC	WATER CLOSET
HB	HOSE BIB	WD	WOOD
HC	HOLLOW CORE	WIN	WINDOW
HRDW	HARDWARE	WP	WATERPROOFING
HM	HOLLOW METAL	WWF	WELDED WIRE FABRIC
HOR (HORIZ)	HORIZONTAL		
H.P.	HIGH POINT		
HPL	HIGH PRESSURE LAMINATE		
HQS	HEADQUARTERS		
HT	HEIGHT		
HTG	HEATING		
HVAC	HEATING, VENTILATING & AIR CONDITIONING		
HWH	HOT WATER HEATER		

DRAWING LIST

0-GENERAL	
A001	COVER SHEET
A002	CODE SHEET
A003	SPECIFICATIONS
A004	ENERGY VERIFICATION
1-ARCHITECTURE	
A101	DEMOLITION PLANS
A103	CONSTRUCTION PLAN
A601	DOORS TYPES, SCHEDULE AND DETAILS
A104	NEW REFLECTED CEILING PLAN
A602	FINISH PLAN AND FINISH SCHEDULE
A501	ARCHITECTURAL DETAILS AND ELEVATIONS
A502	PARTITION TYPES AND DETAILS
A102	DEMO REFLECTED CEILING PLAN
2-MECHANICAL	
M001	GENERAL NOTES SYMBOLS & ABBREVIATIONS
M101	4TH FLOOR DEMOLITION PLAN
M102	EXISTING PARTIAL ROOF PLAN
M201	4TH FLOOR NEW WORK PLAN
M501	DETAILS
M701	SCHEDULES & CONTROLS
3-ELECTRICAL	
E001	GENERAL NOTES SYMBOLS AND ABBREVIATIONS
E101	DEMOLITION PLAN
E201	NEW WORK POWER AND DATA PLAN
E202	NEW WORK LIGHTING PLAN
E501	DETAILS
E601	RISER DIAGRAM AND PANEL SCHEDULES
E203	NEW WORK FIRE ALARM PLAN
E701	CODE COMPLIANCE
4- PLUMBING	
P102	NEW WORK PLAN
P001	GENERAL NOTES SYMBOLS & ABBREVIATIONS
P100	DEMOLITION PLAN
P501	DETAILS SCHEDULES, AND RISER DIAGRAMS

APPLICABLE CODES

- 2013 DCMR12A/CHAPTER 11
- 2011 NATIONAL ELECTRIC CODE
- 2012 INTERNATIONAL BUILDING CODE
- 2012 INTERNATIONAL ENERGY CONSERVATION CODE
- 2012 INTERNATIONAL GREEN CONSTRUCTION CODE
- 2012 INTERNATIONAL FIRE CODE
- 2012 INTERNATIONAL MECHANICAL CODE
- 2012 INTERNATIONAL EXISTING BUILDING CODE
- DC LAW 8-36 DISTRICT OF COLUMBIA ENVIRONMENTAL POLICY ACT OF 1989
- DCMR TITLE 11 - ZONING REGULATIONS
- GREEN BUILDING ACT OF 2006
- DCMR 12K-2013 FOR GREEN COMPLIANCE
- 2010 AMERICANS WITH DISABILITIES ACT
- ICC/ANSI/117.1-2017

SYMBOLS USED AS ABBREVIATIONS:

∠	ANGLE
[	CHANNEL
HP	HUNG PLATE
∅	DIAMETER
-SR-	SURFACE-MOUNTED RACEWAY
℄	CENTER LINE
⊥	PERPENDICULAR
PL	PLATE
@	AT EACH

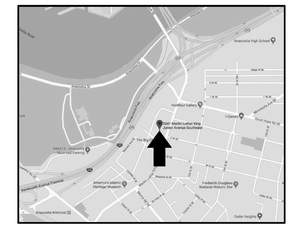

VICINITY MAP

STATEMENT OF WORK

FOLLOWING IS AN OUTLINE OF THE SCOPE OF WORK: RENOVATION THE 4TH FLOOR, SUITE SUITE 400, PROPERTY LOCATED AT: 2041 MARTIN LUTHER KING JR. AVE. SE. WASHINGTON DC 20020.

RENOVATION INCLUDES RE-DISTRIBUTION OF OFFICES, WAITING ROOM & RECEPTION AREAS. TENANT BUILD-OUT INCLUDES ALL NEW PARTITIONS, CEILING AND LIGHTS, FLOORING, DOORS AND WALL TREATMENTS.

PROJECT IS A LEVEL II RENOVATION UNDER THE EXISTING BUILDING CODE

PROJECT DESCRIPTION

PROJECT NAME:	FMCS TENANT FIT OUT
PROJECT ADDRESS:	2041 MARTIN LUTHER KING JR. AVE, SE WASHINGTON, DC 20020
DESCRIPTION	TENANT BUILDOUT
USE GROUP:	B
CONSTRUCTION TYPE:	IIB
NUMBER OF FLOORS:	1
AREA:	3,045 SF
SPRINKLERED SYSTEM:	YES
FIRE ALARM SYSTEM:	YES
STANDPIPES:	YES (SEE PLUMBING DRAWINGS)
FINISH MATERIAL REQ.	WALLS AND CEILINGS: CLASS B, FLOOR CLASS B
GRADE PLANE:	ELEVATION

GRAPHIC SYMBOLS

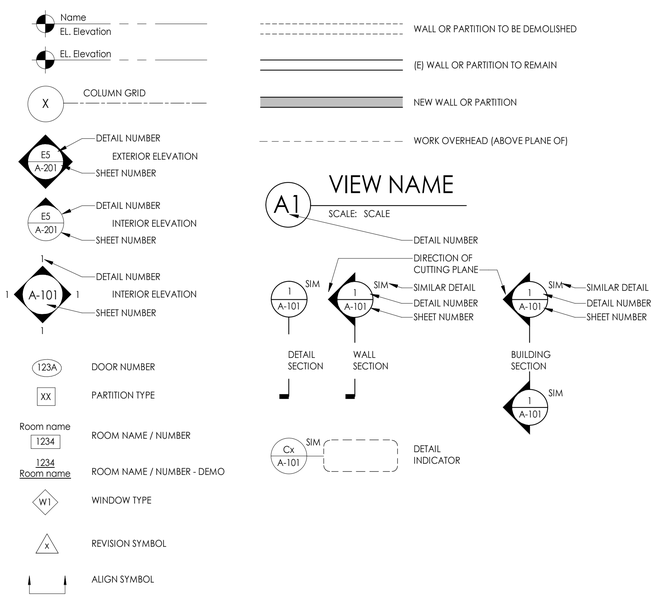

RITTER•NORTON
ARCHITECTS
Professional Limited Liability Company

814 King Street, 3rd Floor
Alexandria, Virginia 22314
703.548.4405 t.
703.548.4910 f.
www.ritternorton.com

DC COURTS INTERIOR ALTERATION
2041 MARTIN LUTHER KING BLVD.SE
SUITE 400
WASHINGTON DC 20020

REVISIONS

95% CHECK SET

03.10.2020

COVER SHEET

A001

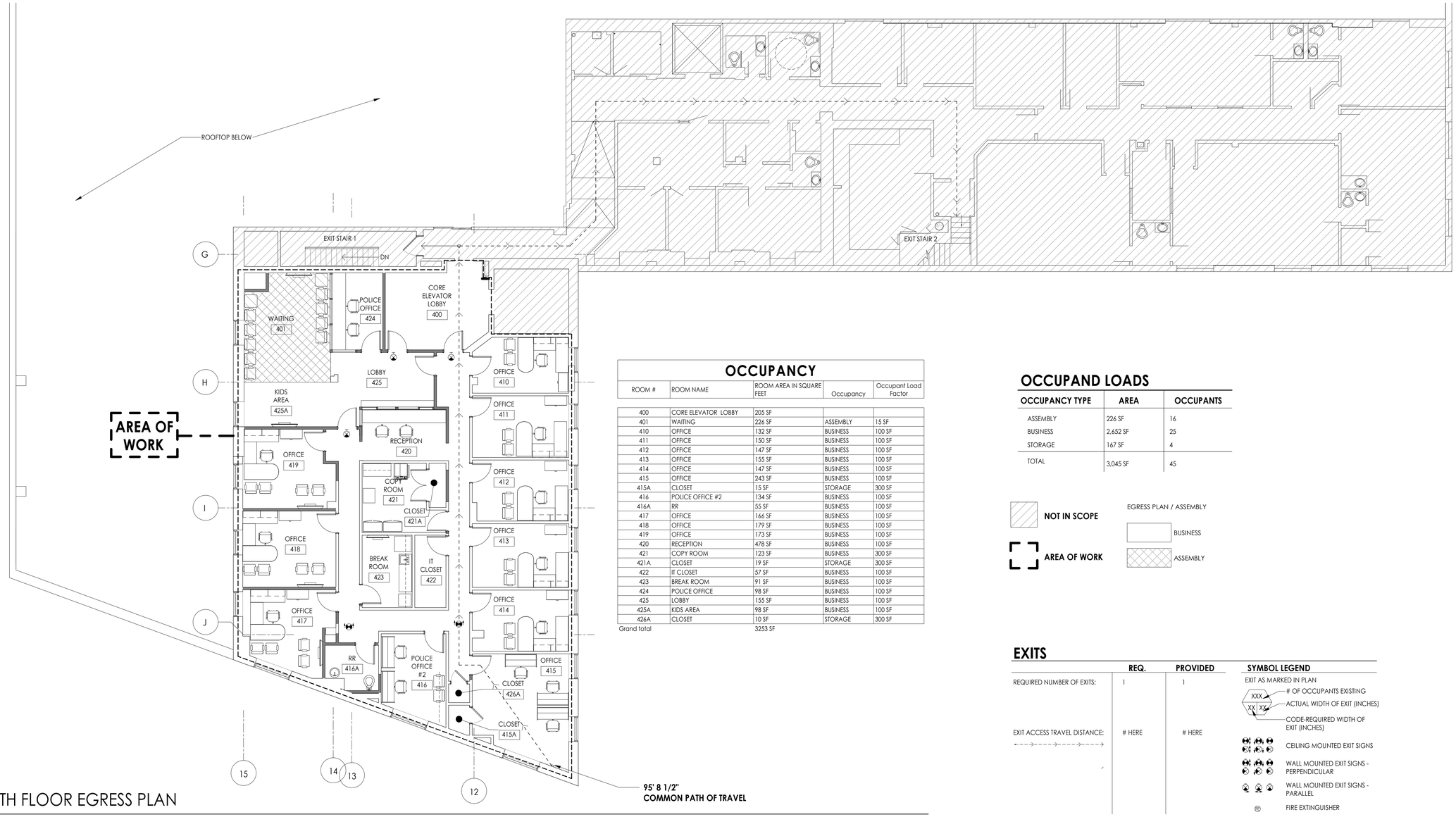

1 4TH FLOOR EGRESS PLAN

SCALE: 1/8" = 1'-0"

OCCUPANCY

ROOM #	ROOM NAME	ROOM AREA IN SQUARE FEET	Occupancy	Occupant Load Factor
400	CORE ELEVATOR LOBBY	205 SF		
401	WAITING	226 SF	ASSEMBLY	15 SF
410	OFFICE	132 SF	BUSINESS	100 SF
411	OFFICE	150 SF	BUSINESS	100 SF
412	OFFICE	147 SF	BUSINESS	100 SF
413	OFFICE	155 SF	BUSINESS	100 SF
414	OFFICE	147 SF	BUSINESS	100 SF
415	OFFICE	243 SF	BUSINESS	100 SF
415A	CLOSET	15 SF	STORAGE	300 SF
416	POLICE OFFICE #2	134 SF	BUSINESS	100 SF
416A	RR	55 SF	BUSINESS	100 SF
417	OFFICE	166 SF	BUSINESS	100 SF
418	OFFICE	179 SF	BUSINESS	100 SF
419	OFFICE	173 SF	BUSINESS	100 SF
420	RECEPTION	478 SF	BUSINESS	100 SF
421	COPY ROOM	123 SF	BUSINESS	300 SF
421A	CLOSET	19 SF	STORAGE	300 SF
422	IT CLOSET	57 SF	BUSINESS	100 SF
423	BREAK ROOM	91 SF	BUSINESS	100 SF
424	POLICE OFFICE	98 SF	BUSINESS	100 SF
425	LOBBY	155 SF	BUSINESS	100 SF
425A	KIDS AREA	98 SF	BUSINESS	100 SF
426A	CLOSET	10 SF	STORAGE	300 SF
Grand total		3253 SF		

OCCUPAND LOADS

OCCUPANCY TYPE	AREA	OCCUPANTS
ASSEMBLY	226 SF	16
BUSINESS	2,652 SF	25
STORAGE	167 SF	4
TOTAL	3,045 SF	45

NOT IN SCOPE

AREA OF WORK

EGRESS PLAN / ASSEMBLY

BUSINESS

ASSEMBLY

EXITS

	REQ.	PROVIDED
REQUIRED NUMBER OF EXITS:	1	1
EXIT ACCESS TRAVEL DISTANCE:	# HERE	# HERE

SYMBOL LEGEND

EXIT AS MARKED IN PLAN

XXX — # OF OCCUPANTS EXISTING

XX XX — ACTUAL WIDTH OF EXIT (INCHES)

CODE-REQUIRED WIDTH OF EXIT (INCHES)

CEILING MOUNTED EXIT SIGNS

WALL MOUNTED EXIT SIGNS - PERPENDICULAR

WALL MOUNTED EXIT SIGNS - PARALLEL

FE — FIRE EXTINGUISHER

PROJECT DESCRIPTION

PROJECT NAME:	FMCS TENANT FIT OUT
PROJECT ADDRESS:	2041 MARTIN LUTHER KING JR. AVE, SE WASHINGTON, DC 20020
DESCRIPTION	TENANT BUILDOUT
USE GROUP:	B
CONSTRUCTION TYPE:	IIB
NUMBER OF FLOORS:	1
AREA:	3,045 SF
SPRINKLERED SYSTEM:	YES
FIRE ALARM SYSTEM:	YES
STANDPIPES:	YES (SEE PLUMBING DRAWINGS)
FINISH MATERIAL REQ.	WALLS AND CEILINGS: CLASS B, FLOOR CLASS B
GRADE PLANE:	ELEVATION

STATEMENT OF WORK

FOLLOWING IS AN OUTLINE OF THE SCOPE OF WORK: RENOVATION THE 4TH FLOOR, SUITE SUITE 400, PROPERTY LOCATED AT: 2041 MARTIN LUTHER KING JR. AVE. SE. WASHINGTON DC 20020.

RENOVATION INCLUDES RE-DISTRIBUTION OF OFFICES, WAITING ROOM & RECEPTION AREAS. TENANT BUILD-OUT INCLUDES ALL NEW PARTITIONS, CEILING AND LIGHTS, FLOORING, DOORS AND WALL TREATMENTS.

PROJECT IS A LEVEL II RENOVATION UNDER THE EXISTING BUILDING CODE

APPLICABLE CODES

- 2013 DCMR12A/CHAPTER 11
- 2011 NATIONAL ELECTRIC CODE
- 2012 INTERNATIONAL BUILDING CODE
- 2012 INTERNATIONAL ENERGY CONSERVATION CODE
- 2012 INTERNATIONAL GREEN CONSTRUCTION CODE
- 2012 INTERNATIONAL FIRE CODE
- 2012 INTERNATIONAL MECHANICAL CODE
- 2012 INTERNATIONAL EXISTING BUILDING CODE
- DC LAW 8-36 DISTRICT OF COLUMBIA ENVIRONMENTAL POLICY ACT OF 1989
- DCMR TITLE 11 - ZONING REGULATIONS
- GREEN BUILDING ACT OF 2006
- DCMR 12K-2013 FOR GREEN COMPLIANCE
- 2010 AMERICANS WITH DISABILITIES ACT
- ICC/ANSI/117.1-2017

RITTER+NORTON ARCHITECTS
Professional Limited Liability Company

814 King Street, 3rd Floor
Alexandria, Virginia 22314
703.548.4405 t.
703.548.4910 f.
www.ritternorton.com

DC COURTS INTERIOR ALTERATION

2041 MARTIN LUTHER KING BLVD.SE
SUITE 400
WASHINGTON DC 20020

REVISIONS

95% CHECK SET

03.10.2020

CODE SHEET

A002

BROADLOOM CARPET

1. ALL WORK SHALL BE PERFORMED IN ACCORDANCE WITH THE GUIDELINES, PROCEDURES, AND SPECIFICATIONS OUTLINED IN CARPET AND RUG INSTITUTE PUBLICATION #104 (CRI-104 FOR COMMERCIAL INSTALLATIONS, LATEST EDDITION).

2. CLEAN AND PREPARE SUBSTRATE TO REMOVE ALL DUST, DIRT, SOLVENTS, OIL, GREASE, PAINT, PLASTER, AND SUBSTANCES DETRIMENTAL TO PROPER PERFORMANCE OF ADHESIVE AND CARPET. CONCRETE FLOORS SHALL BE FLASH PATCHED AS NECESSARY TO PROVIDE A SMOOTH SURFACE TO ACCEPT CARPET FLOORING.

3. INSTALL BROADLOOM CARPET AFTER OTHER FINISHING OPERATIONS, INCLUDING PAINTING, HAVE BEEN COMPLETED, UNLESS OTHERWISE NOTED.

4. INSTALL BROADLOOM CARPET SQUARE AND ALIGNED WITH SURROUNDING CONSTRUCTION.

5. LAY BROADLOOM CARPET IN THE SAME DIRECTION UNLESS OTHERWISE NOTED. MAINTAIN UNIFORMITY OF DIRECTION.

6. NEATLY TRIM CARPET EDGES FOR TIGHT FIT ALONG WALLS. CUT AND FIT EVENLY AROUND PROJECTIONS AND INTO TRIM STRIPS AND REVEALS. FIT CLOSELY AND EVENLY TO DOORWAYS, TERMINATING CARPET AT FRAMES. FINISHED INSTALLATION SHALL BE SMOOTH AND FREE OF RIPPLES AND PUCKERS.

7. FLOOR FINISH TRANSITIONS SHALL OCCUR AT CENTERLINE OF DOOR OR CASED OPENING UNLESS OTHERWISE NOTED. PROVIDE LOW PROFILE MILL FINISH ALUMINUM REDUCERS AND TRANSITION STRIPS AT ALL MATERIAL TRANSITIONS U.O.N. SUBMIT REDUCER TO ARCHITECT FOR APPROVAL PRIOR TO INSTALLATION.

8. EXTRA STOCK: PROVIDE A MINIMUM 100 S.F. OF PACKAGED EXTRA STOCK OF EACH CARPET STYLE AND COLOR FOR THE OWNER'S FUTURE USE.

9. PROVIDE 10% ATTIC STOCK FOR EACH TYPE OF CARPET TILE INDICATED.

DOORS AND FRAMES

1. COMPLY WITH STEEL DOOR INSTITUTE (SDI) SDI-105 AND SDI-100: "RECOMMENDED SPECIFICATIONS FOR STANDARD STEEL DOORS AND FRAMES"; AND ARCHITECTURAL WOODWORKING INSTITUTES (AWI) "ARCHITECTURAL WOODWORK QUALITY STANDARDS ILLUSTRATED". ALL DOORS AND FRAMES SHALL BE INSTALLED PLUMB, RIGID, PROPERLY ALIGNED, AND SECURELY FASTENED IN PLACE.

2. STEEL DOOR FRAMES SHALL COMPLY WITH ANSI A250.8 AND WITH DETAILS INDICATED FOR TYPE AND PROFILE. FRAMES SHALL BE FABRICATED FROM 16 GA COLD-ROLLED SHEET STEEL COMPLYING WITH ASTM A 1008/A 1008M, COMMERCIAL STEEL (CS), TYPE B, SUITABLE FOR EXPOSED APPLICATIONS. FACTORY PRIME ALL SURFACES TO BE PAINTED IN THE FIELD.

3. STEEL FRAMES SHALL BE FABRICATED TO BE RIGID AND FREE OF DEFECTS, WARPS, OR BUCKLES. ALL FRAMES AT PUBLIC CORRIDORS SHALL BE WELDED. ALL FRAMES AT NON-PUBLIC GYP BOARD WALLS CAN BE KNOCK-DOWN CONSTRUCTION. WHERE FRAMES ARE FABRICATED IN SECTIONS PROVIDE CONCEALED ALIGNMENT PLATES OR ANGLES AT EACH JOINT, FABRICATED OF SAME THICKNESS METAL AS FRAMES. ALL FRAME CORNERS SHALL BE MITERED WITH SMOOTH, EVEN, TIGHT JOINTS.

4. ALL DOORS AND FRAMES SHALL BE FACTORY PREPARED TO RECEIVE ALL HARDWARE SPECIFIED. COMPLY WITH DHI A115 SERIES.

5. U.N.O. ALL FLUSH METAL DOORS SHALL BE MINIMUM SDI GRADE II, HEAVY DUTY, SEAMLESS COMPOSITE CONSTRUCTION, WITH MINIMUM 18 GA FACES. CORES SHALL BE RESIN IMPREGNATED KRAFT PAPER HONEYCOMB OR MINERAL FIBER BOARD IF FIRE RATED, U.N.O.

6. U.N.O. FLUSH WOOD DOORS WITH TRANSPARENT OR STAINED FINISHES SHALL BE AWI CUSTOM GRADE OR BETTER WITH ROTARY SLICED WOOD VENEER, SPECIES AS INDICATED. WOOD DOORS WITH OPAQUE FINISHES SHALL BE AWI CUSTOM GRADE WITH MEDIUM-DENSITY OVERLAY OR HARDBOARD.

7. SOLID CORE DOORS SHALL BE CONSTRUCTED OF STRUCTURAL COMPOSITE LUMBER OR GLUED BLOCK (STAVES). PARTICLEBOARD CORES ARE NOT ACCEPTABLE FOR SOLID DOORS.

SUSPENDED CEILING

1. REFER TO MECHANICAL AND ELECTRICAL DRAWINGS AND SPECIFICATIONS FOR DESIGN OF THESE SYSTEMS. THE LOCATIONS OF DEVICES RELATING TO THESE SYSTEMS SHALL BE AS SHOWN ON ARCHITECTURAL REFLECTED CEILING PLAN. WHERE DISCREPANCIES ARE INDICATED, THE ARCHITECTURAL PLAN SHALL TAKE PRECEDENCE. IN CASES WHERE DISCREPANCIES EXIST BETWEEN THE LIGHTING FIXTURE LOCATION AND DIFFUSER LOCATION, SPRINKLER HEAD LOCATION, STRUCTURAL ELEMENTS, OR ANY OTHER OBSTRUCTION, THE GENERAL CONTRACTOR SHALL NOTIFY THE ARCHITECT AND CONFIRM AN ALTERNATE LAYOUT PRIOR TO PROCEEDING WITH THE WORK.

2. THE GENERAL CONTRACTOR SHALL VERIFY ACTUAL FIELD CONDITIONS AND LOCATIONS OF ELECTRICAL, MECHANICAL, PLUMBING, AND STRUCTURAL ELEMENTS IN ADDITION TO OTHER APPLICABLE ITEMS. ARRANGE AND MODIFY NON-VISIBLE ITEMS TO ENSURE ADEQUATE CLEARANCES FOR CEILING LAYOUT AS SHOWN BEFORE RELATED ELEMENTS ARE CONSTRUCTED OR INSTALLED. IF THERE ARE ANY CONFLICTS WITH EXISTING BUILDING ELEMENTS OR OTHER COORDINATION ISSUES AFFECTING THE DESIGNED CEILING LAYOUT, THE CONTRACTOR SHALL OBTAIN A WRITTEN CLARIFICATION FROM THE ARCHITECT PRIOR TO PROCEEDING WITH THE WORK.

3. INSTALL ACOUSTICAL TILE SYSTEM INDICATED IN ACCORDANCE WITH MANUFACTURER'S PRINTED INSTRUCTION AND ASTM C636. INSTALL IN LEVEL AND UNIFORM PLANE, FREE FROM TWISTS, WARPS, AND DENTS. LEVEL ENTIRE CEILING ASSEMBLY TO A TOLERANCE OF 1/8" IN 10'. VARIATION FROM PLUMB OF GRID MEMBERS CAUSED BY ECCENTRIC LOADS SHALL BE 2 DEGREES MAXIMUM (.03 RAD).

4. PROVIDE ALL NECESSARY MANUFACTURER'S STANDARD TRIM AND ACCESSORIES FOR COMPLETE INSTALLATION OF SUSPENSION SYSTEM. ACCESSORIES AND TRIM SHALL MATCH FINISH OF SUSPENSION SYSTEM. INSTALL EDGE MOLDINGS WHERE CEILINGS ABUT WALLS, PARTITIONS, OR OTHER ELEMENTS. MITER CUT INSIDE AND OUTSIDE CORNERS TO PROVIDE FLUSH, TIGHT, HAIRLINE JOINTS.

5. RECESSED DOWN LIGHTS AND SURFACE-MOUNTED LIGHTING FIXTURES SHALL BE CENTERED IN THE CEILING TILE OR CENTERED ON THE GRID BETWEEN TILES, UNLESS OTHERWISE NOTED.

6. LIGHT FIXTURES SHALL BE INDEPENDENTLY SUPPORTED BY HANGER WIRE FROM A MINIMUM OF AT LEAST TWO OPPOSING CORNERS, USE OF THE SUPPORT GRID FOR THE SUSPENDED CEILING TO SUPPORT THE WEIGHT OF THE LIGHT FIXTURES IS NOT ACCEPTABLE.

7. EXTRA STOCK: DELIVER ONE FACTORY PACKED BOX OF EACH TYPE AND COLOR OF BOARD AND TILE INSTALLED.

8. ANY UN-USED NEW MATERIAL SHALL BECOME THE PROPERTY OF USG AND DELIVERED TO BUILDING STORAGE.

9. CONTRACTOR IS RESPONSIBLE FOR REMOVING ALL ABANDONED CONDUIT AND WIRING AND IS RESPONSIBLE FOR ALL CLOSE-IN WORK REQUIRED TO PASS INSPECTION.

DOORS HARDWARE

1. COMPLY WITH AMERICAN NATIONAL STANDARDS INSTITUTE/BUILDERS HARDWARE MANUFACTURERS ASSOCIATION ANSI/BHMA A156. WHERE FIRE-RATED DOOR ASSEMBLIES ARE INDICATED, PROVIDE DOOR HARDWARE RATED FOR USE IN ASSEMBLIES COMPLYING WITH NFPA 80. PROVIDE DOOR HARDWARE THAT MEETS REQUIREMENTS OF ASSEMBLIES TESTED ACCORDING TO UL 1784 AND INSTALLED IN COMPLIANCE WITH NFPA 105. DOOR HARDWARE SHALL CONFORM TO ICC/ANSI A117.1.

2. HINGES FABRICATED FROM 304 STAINLESS STEEL, MINIMUM THICKNESS OF .134" AND A MINIMUM OF 4-1/2" IN HEIGHT, WITH SQUARE CORNERS, FIVE-KNUCKLE DESIGN, FLAT BUTTON TIPS AND HAVE BALL BEARINGS. OUT-SWINGING ACCESS CONTROLLED DOORS SHALL HAVE NON-REMOVABLE PINS (NRP) TO PREVENT REMOVAL OF PIN WHILE DOOR IS IN CLOSED POSITION.

3. LOCKS AND LATCHES SHALL BE OF ONE MANUFACTURER AS LISTED FOR CONTINUITY OF DESIGN AND CONSIDERATION OF WARRANTY, AND COMPLYING WITH ANSI/BHMA A156.2 SERIES 4000 CERTIFIED TO GRADE 1, FOR A MINIMUM DESIGN LOAD OF 1150LBF (100PSF) PER LEAF. LOCK AND LATCH FUNCTION NUMBERS AND DESCRIPTIONS OF MANUFACTURES SERIES AS LISTED IN HARDWARE SETS. LOCK AND LATCH CHASSIS TO BE ZINC DICHROMATE FOR CORROSION RESISTANCE. WITH KEYED, FUNCTIONS TO BE OF A FREEWHEELING DESIGN TO HELP RESISTS AGAINST VANDALISM, AND BE NON-HANDED, FIELD REVERSIBLE WITH THRU-BOLT MOUNTING AND HAVE NO EXPOSED SCREWS. LEVERS SHALL BE ZINC CAST. ROSES SHALL BE OF SOLID BRASS OR STAINLESS STEEL MATERIAL.

4. EXIT DEVICES (ELECTRIFIED AND REGULAR) SHALL BE OF ONE MANUFACTURER AS LISTED FOR CONTINUITY OF DESIGN AND CONSIDERATION OF WARRANTY. MANUFACTURER TO BE CERTIFIED BY THE FOLLOWING: ANSI/BHMA A156.3, GRADE 1. ELECTRIFIED EXIT DEVICE SHALL BE LOCALLY WIRED, WITH COMPATIBLE DOOR CONSEALED WIRE HARNESS, DOOR FRAME WIRE HARNESS, AND POWER SUPPLY WITH UNIVERSAL RELAY. POWER SUPPLY TO BE, FAIL SAFE TYPE AND HAVE BUILDING FIREALARM INTERFACE. ALARM DEVICE TO BE HARDWIRED. ALL WIRING TO BE CONCEALED TO TAMPER PROOF.

5. CLOSERS SHALL BE PRODUCT OF ONE MANUFACTURER, COMPLYING WITH ANSI/BHMA A156.4 GRADE 1. PROVIDE CAST IRON NON-HANDED BODIES WITH FULL ALUMINUM COVERS. COVERS SHALL HAVE SEPARATE STAKED ADJUSTABLE VALVE SCREWS FOR LATCH SPEED, SWEEP SPEED, AND BACKCHECK. PROVIDE ARM AS REQUIRED BY DOOR SWING, TO PROVIDE A FULLY OPERABLE DOOR. BOTH CLOSER AND ARM SHALL BE SURFACE MOUNTED. CLOSERS OPENING FORCE SHALL COMPLY ACCESSIBILITY REQUIREMENTS PER ANSI ICC A117.1-2009. INTERIOR HINGED OPENINGS: 5.0 LBS. EXTERIOR HINGED OPENINGS: 8.5 LBS. FIRE RATED OPENINGS: MINIMUM OPENING FORCE ALLOWABLE BY AUTHORITY HAVING JURISDICTION.

6. PROVIDE SILENCERS WHERE SMOKE, LIGHT, OR WEATHER SEAL ARE NOT REQUIRED. INSTALL THREE SILENCERS PER SINGLE DOOR FRAME. TWO PER DOUBLE DOOR FRAME.

7. SEE DOOR HARDWARE SCHEDULE FOR ADDTIONAL INFORMATION.

PAINT

1. ENSURE THAT THE AMBIENT TEMPERATURE IN THE AREAS SCHEDULED FOR PAINTING IS NO LESS THAN 50 DEGREES FAHRENHEIT, THIS TEMPERATURE REFERS TO THE SURFACE TO WHICH THE PAINT IS BEING APPLIED AND TO THE AIR TEMPERATURE. CONSULT WITH PAINT MANUFACTURER FOR ANY DEVIATIONS TO THIS RULE FOR ALL PAINT PRODUCTS SPECIFIED. DO NOT APPLY WHEN RELATIVE HUMIDITY EXCEEDS 85, AND DO NOT APPLY TO DAMP OR WET SURFACES.

2. ALL DOORS, DOOR FRAMES, METAL GRILLES, WOOD TRIM, AND MILLWORK SHALL BE PAINTED WITH A SEMI-GLOSS ENAMEL PAINT UNLESS OTHERWISE NOTED.

3. SUBSTITUTIONS FOR THE PAINT MANUFACTURER(S) SPECIFIED SHALL BE BROUGHT TO THE ATTENTION OF THE ARCHITECT PRIOR TO PURCHASING THE PAINT. COLOR-MATCHED SAMPLES SHALL BE SUBMITTED TO THE ARCHITECT FOR APPROVAL.

4. ALL SURFACES TO BE PAINTED SHALL BE CLEAN, DRY, SMOOTH, AND DUST-FREE. SURFACES SHALL BE PREPARED IN ACCORDANCE TO THE PAINT MANUFACTURER'S INSTALLATION INSTRUCTIONS.

5. ALL PAINTED SURFACES SHALL RECEIVE A MINIMUM OF ONE PRIME COAT AND TWO FINISH COATS. APPLICATOR SHALL USE A PRIMER THAT IS COMPATIBLE WITH SUBSTRATE TO BE PAINTED. PRIMER SHALL BE ROLL-APPLIED TO GYPSUM BOARD; SPRAY APPLICATION IS NOT ACCEPTABLE.

6. ALL FREESTANDING COLUMNS SHALL BE PAINTED TO MATCH SCHEDULE FINISHES IN THE AREA UNLESS NOTED OTHERWISE.

7. CODE-REQUIRED LABELS-UL, FACTORY MUTUAL-OR ANY EQUIPMENT IDENTIFICATION, PERFORMANCE RATING, NAME OR NOMENCLATURE PLATES SHALL BE KEPT FREE OF PAINT.

8. PATCH AND TOUCH UP PAINTING REQUIRED AFTER FURNITURE AND EQUIPMENT INSTALLATION.

9. INDUCTION UNITS CALLED OUT TO BE PAINTED, SHALL BE ELECTROSTATICALLY PAINTED.

MILLWORK

1. QUALITY STANDARD: UNLESS OTHERWISE INDICATED, COMPLY WITH AWI'S "ARCHITECTURAL WOODWORK QUALITY STANDARDS.", CUSTOM GRADE OR BETTER.

2. ENVIRONMENTAL LIMITATIONS: DO NOT DELIVER OR INSTALL WOODWORK UNTIL BUILDING IS ENCLOSED, WET WORK IS COMPLETE, AND HVAC SYSTEM IS OPERATING AND MAINTAINING TEMPERATURE AND RELATIVE HUMIDITY AT OCCUPANCY LEVELS DURING THE REMAINDER OF THE CONSTRUCTION PERIOD.

3. WOOD PRODUCTS:
   A. HARDBOARD: AHA A135.4.
   B. MEDIUM-DENSITY FIBERBOARD: ANSI A208.2, GRADE MD, MADE WITH BINDER CONTAINING NO UREA FORMALDEHYDE.
   C. PARTICLEBOARD: ANSI A208.1, GRADE M-2
   D. SOFTWOOD PLYWOOD: DOC PS 1, MEDIUM DENSITY OVERLAY.
   E. VENEER-FACED PANEL PRODUCTS: WOOD SPECIES: MATCH SAMPLE; TRANSPARENT FINISH: CLEAR FINISH.

4. THERMOSET DECORATIVE PANELS: PARTICLEBOARD OR MEDIUM-DENSITY FIBERBOARD FINISHED WITH THERMALLY FUSED, MELAMINE-IMPREGNATED DECORATIVE PAPER COMPLYING WITH LMA SAT-1.

5. HIGH-PRESSURE DECORATIVE LAMINATE: NEMA LD 3, GRADES AS INDICATED OR, IF NOT INDICATED, AS REQUIRED BY WOODWORK QUALITY STANDARD.
   A. ADHESIVES: DO NOT USE ADHESIVES THAT CONTAIN UREA FORMALDEHYDE.
   B. VOC LIMITS FOR INSTALLATION ADHESIVES AND SEALANTS: USE PRODUCTS THAT COMPLY WITH THE FOLLOWING LIMITS FOR VOC CONTENT WHEN CALCULATED ACCORDING TO 40 CFR 59, SUBPART D (EPA METHOD 24):
      - WOOD GLUES: 30 g/L.
      - MULTIPURPOSE CONSTRUCTION ADHESIVES: 70 g/L.
      - STRUCTURAL WOOD MEMBER ADHESIVE: 140 g/L.
      - ARCHITECTURAL SEALANTS: 250 g/L.

6. SOLID-SURFACING MATERIAL: HOMOGENEOUS SOLID SHEETS OF FILLED PLASTIC RESIN COMPLYING WITH ISSFA-2. MIN ½" THICK.

7. TEMPERED FLOAT GLASS FOR CABINET DOORS: ASTM C 1048, KIND FT, CONDITION A, TYPE I, CLASS 1 (CLEAR), QUALITY-Q3, WITH EXPOSED EDGES SEAMED BEFORE TEMPERING, 6 MM THICK, UNLESS OTHERWISE INDICATED.

8. FIRE-RETARDANT PARTICLEBOARD AND FIBERBOARD: FLAME-SPREAD INDEX OF 25 OR LESS AND SMOKE-DEVELOPED INDEX OF 25 OR LESS PER ASTM E 84.

9. CONCEALED "EUROPEAN" STYLE, 1.90 RAD (110 DEGREE) OPENING.

10. CATCHES: MAGNETIC CATCHES, BHMA A156.9, B03141.

11. DRAWER SLIDES: STEEL BALL-BEARING, FULL EXTENSION, 35 KG (75 LB) CAPACITY, MINIMUM, DRAWER HOLD-IN CLOSED POSITION.

12. ALUMINUM SLIDES FOR SLIDING GLASS DOORS: BHMA A156.9, B07063.

13. CABINET LOCKS: 5L SERIES, BEST LOCK CORP., SURFACE MOUNTED.

14. SHELF STANDARDS AND SUPPORTS: STEEL, RECESSED MOUNTED, ADJUSTABLE ON 12MM (1/2 INCH) CENTERS. CLIP TYPE SUPPORTS.

15. SHELF STANDARDS AND BRACKETS: STANDARD - STEEL, SURFACE MOUNTED, ADJUSTABLE ON 25MM (1 INCH) CENTERS. BRACKET - STEEL 300MM (12 INCH)

16. EXPOSED HARDWARE FINISHES: US26D

17. WOOD CABINETS:
   A. FLUSH OVERLAY CONSTRUCTION.
   B. GRAIN DIRECTION: HORIZONTALLY FOR DRAWER FRONTS, DOORS, & FIXED PANELS.
   C. MATCHING OF ADJACENT VENEER LEAVES: BOOK MATCH. VENEER MATCHING WITHIN PANEL FACE: RUNNING MATCH.

18. INSTALL WOODWORK LEVEL, PLUMB, TRUE, AND STRAIGHT TO A TOLERANCE OF 3 MM IN 2400 MM (1/8 INCH IN 96 INCHES). SHIM AS REQUIRED WITH CONCEALED SHIMS.

19. SCRIBE AND CUT WOODWORK TO FIT ADJOINING WORK, REFINISH CUT SURFACES, AND REPAIR DAMAGED FINISH AT CUTS.

20. CABINETS: INSTALL WITHOUT DISTORTION SO DOORS AND DRAWERS FIT OPENINGS PROPERLY AND ARE ACCURATELY ALIGNED. ADJUST HARDWARE TO CENTER DOORS AND DRAWERS IN OPENINGS AND TO PROVIDE UNENCUMBERED OPERATION.

21. TRANSPARENT FINISH 1: SYSTEM - 5, CONVERSION VARNISH. KLEARVAR 3 COAT SYSTEM BY ML CAMPBELL OR APPROVED EQUAL.

22. TRANSPARENT FINISH 2: SYSTEM - 3, POSTCATALYZED LACQUER. KLEARVAR 3 COAT SYSTEM BY ML CAMPBELL OR APPROVED EQUAL.

23. SUBMIT SHOP DRAWINGS AND FINISH SAMPLES FOR APPROVAL PRIOR TO FABRICATION.

TILE

1. COMPLY WITH TCA'S "HANDBOOK FOR CERAMIC TILE INSTALLATION", LATEST EDITION. COMPLY WITH PARTS OF THE ANSI A108 SERIES "SPECIFICATIONS FOR INSTALLATION OF CERAMIC TILE" THAT ARE REFERENCED IN TCA INSTALLATION METHODS, SPECIFIED IN TILE INSTALLATION SCHEDULES, AND APPLY TO TYPES OF SETTING AND GROUTING MATERIALS USED. COMPLY WITH ANSI A 108.5 FOR CERAMIC TILE INSTALLED WITH DRY-SET PORTLAND CEMENT. COMPLY WITH ANSI A137.1- RECOMMENDED STANDARD SPECIFICATIONS FOR CERAMIC TILE. FOR THE PURPOSES OF THIS PROJECT "CERAMIC TILE" SHALL BE SYNONYMOUS WITH "PORCELAIN TILE".

2. EXTEND TILE WORK INTO RECESSES AND UNDER OR BEHIND EQUIPMENT AND FIXTURES TO FORM COMPLETE COVERING WITHOUT INTERRUPTIONS UNLESS OTHERWISE INDICATED. TERMINATE WORK NEATLY AT OBSTRUCTIONS, EDGES, AND CORNERS WITHOUT DISRUPTING PATTERN OR JOINT ALIGNMENTS.

3. ACCURATELY FORM INTERSECTIONS AND RETURNS. PERFORM CUTTING AND DRILLING OF TILE WITHOUT MARRING VISIBLE SURFACES. CAREFULLY GRIND CUT EDGES OF TILE ABUTTING TRIM, FINISH, OR BUILT-IN ITEMS FOR STRAIGHT ALIGNED JOINTS. FIT TILE CLOSELY TO ELECTRICAL OUTLETS, PIPING, FIXTURES, AND OTHER PENETRATIONS SO PLATES, COLLARS, OR COVERS OVERLAP TILE. ALL TILES SHALL BE INSTALLED IN A FLUSH AND EVEN MANNER AND CONFORM TO ANSI A137.1. LIPPAGE OF 1/16" OR GREATER IS NOT ACCEPTABLE.

4. JOINTING PATTERN: FOLLOW LAYOUT AS INDICATED ON PLANS AND ELEVATIONS VERY CAREFULLY. PROVIDE PRELIMINARY LAYOUT OF TILE GRID ON WALLS AND FLOORS FOR APPROVAL BY ARCHITECT AND GOVERNMENT PRIOR TO INSTALLATION. PROVIDE UNIFORM JOINT WIDTHS UNLESS OTHERWISE INDICATED.

5. EXPANSION JOINTS: PROVIDE EXPANSION JOINTS AND OTHER SEALANT-FILLED JOINTS, INCLUDING CONTROL, CONTRACTION, AND ISOLATION JOINTS, WHERE INDICATED. FORM JOINTS DURING INSTALLATION OF SETTING MATERIALS, MORTAR BEDS, AND TILE. DO NOT SAW-CUT JOINTS AFTER INSTALLING TILES. WHERE JOINTS OCCUR IN CONCRETE SUBSTRATES, LOCATE JOINTS IN TILE SURFACES DIRECTLY ABOVE THEM.

6. INSTALL CEMENTITIOUS BACKER UNITS (CBU) AND TREAT JOINTS AT ALL WALL TILE LOCATIONS ACCORDING TO ANSI A108.11 AND MANUFACTURER'S WRITTEN INSTRUCTIONS FOR TYPE OF APPLICATION INDICATED. CBUS SHALL COMPLY WITH ANSI 118.9 OR ASTM 1325. PROVIDE 5/8" DUROCK CBU BY USG OR APPROVED EQUAL. JOINTS SHALL BE APPROXIMATELY 1/16", FILLED WITH LATEX PORTLAND CEMENT MORTAR WITH JOINTS TAPED WITH 2" FIBERGLASS MESH TAPE.

7. INSTALL WATERPROOF MEMBRANE BELOW ALL NEW FLOOR TILE AREAS. MEMBRANE SHALL SEAMLESSLY RUN UP WALLS A MINIMUM OF 12". MEMBRANE INSTALLATION SHALL COMPLY WITH ANSI A108.13 AND MANUFACTURER'S WRITTEN INSTRUCTIONS TO PRODUCE WATERPROOF MEMBRANE OF UNIFORM THICKNESS AND BONDED SECURELY TO SUBSTRATE. PROVIDE FULL EMERSION WATER TESTING TO CONFIRM INTEGRITY AND PROPER INSTALLATION OF MEMBRANE PRIOR TO INSTALLATION OF TILE. FOLLOW MANUFACTURER'S WATER TESTING INSTRUCTIONS.

8. SUBSTRATES SHALL BE PROPERLY PREPARED TO RECEIVE NEW FINISHES PER MANUFACTURERS INSTALLATION INSTRUCTIONS. FILL CRACKS, HOLES, AND DEPRESSIONS IN CONCRETE SUBSTRATES WITH TROWELABLE LEVELING OR PATCHING COMPOUND SPECIFICALLY RECOMMENDED BY TILE-SETTING MATERIAL MANUFACTURER. SUBSTRATES FOR TILE SHALL BE FIRM, DRY, CLEAN, FREE OF OILS AND WAXY FILMS, AND SHALL BE WITHIN FLATNESS TOLERANCES REQUIRED BY REFERENCED STANDARDS.

9. APPLY GROUT SEALERS TO CEMENTITIOUS GROUT JOINTS ACCORDING TO GROUT-SEALER MANUFACTURER'S INSTALLATION INSTRUCTIONS.

10. FOR TILES EXHIBITING COLOR VARIATIONS, USE FACTORY BLENDED TILE OR BLEND TILES AT PROJECT SITE.

11. SOFT JOINTS SHALL BE INSTALLED IN ACCORDANCE WITH TCA HANDBOOK. ALL VISIBLE SOFT JOINTS SHALL MATCH COLOR OF ADJACENT TILE GROUT. UNLESS INDICATED ON DRAWINGS, THE CONTRACTOR SHALL COORDINATE WITH ARCHITECT FOR EXACT LOCATIONS OF SOFT JOINTS PRIOR TO INSTALLATION.

12. EXTRA STOCK: FURNISH QUANTITY OF FULL SIZE UNITS EQUAL TO A MINIMUM OF 3% OF AMOUNT INSTALLED FOR EACH TYPE, COMPOSITION, COLOR, PATTERN, AND SIZE INDICATED.

13. MOCKUPS: BEFORE INSTALLING TILE, CONSTRUCT MOCKUPS FOR EACH FORM OF CONSTRUCTION AND FINISH REQUIRED TO VERIFY SELECTIONS MADE UNDER SAMPLE SUBMITTALS AND TO DEMONSTRATE AESTHETIC EFFECTS AND QUALITIES OF MATERIALS AND EXECUTION.

14. ALLOW FOR MISCELLANEOUS MINOR FURRING OR PADDING OUT OF PARTITIONS TO ACCOMMODATE ALIGNMENT OF WALLS WITH TILE JOINTS.

15. ALL MATERIALS SHALL BE INSTALLED PER MANUFACTURER'S INSTALLATION INSTRUCTIONS AND RECOMMENDATIONS. PROVIDE ALL NECESSARY COMPONENTS AND ACCESSORIES FOR COMPLETE INSTALLATION OF ALL SYSTEMS.

16. PRIMER, WATERPROOFING, CRACK PREVENTION MEMBRANE, MORTAR, GROUT, AND CAULKING SHALL BE PROVIDED AS COMPLETE SYSTEM BY A SINGLE MANUFACTURER AND SHALL INCLUDE A 10 YEAR MINIMUM WARRANTY. ALL ADDITIONAL REQUIRED ADMIXTURES, SEALANTS OR OTHER COMPONENTS REQUIRED FOR THE 10 YEAR WARRANTY SHALL BE PROVIDED BY THE CONTRACTOR.

17. THE WATERPROOF MEMBRANE, MORTAR BED AND GROUT MATERIAL SHALL BE PROVIDED AS A COMPLETE SYSTEM BY A SINGLE MANUFACTURER AND SHALL INCLUDE A 10 YEAR MINIMUM WARRANTY. ALL ADDITIONAL REQUIRED ADD MIXTURES, BOND COATS, SEALANTS OR OTHER COMPONENTS REQUIRED FOR THE 10 YEAR WARRANTY SHALL BE PROVIDED BY THE CONTRACTOR.

18. TYPICAL WATERPROOF MEMBRANE SHALL BE FABRIC REINFORCED LIQUID RUBBER POLYMER, CUSTOM WATERPROOFING AND ANTI-FRACTURE MEMBRANE BY LATICRETE (#9235) (OR APPROVED EQUAL). MEMBRANE SHALL RUN SEAMLESSLY ALONG ALL FLOOR AREAS AND UP ALL PERIMETER WALLS A MINIMUM OF 12". PROVIDE MEMBRANE AT ALL FLOOR TILE LOCATIONS IN RESTROOM.

19. TYPICAL THINSET MORTAR/LHT BONDING MORTAR BED FOR FLOORS AND WALLS SHALL BE A POLYMER-MODIFIED MORTAR, VERSABOND (LFT) PROFESSIONAL LARGE FORMAT TILE MORTAR (OR EQUAL). FOR WALL APPLICATIONS, PROVIDE MORTAR THAT COMPLIES WITH REQUIREMENTS FOR NON-SAGGING MORTAR IN ADDITION TO THE OTHER REQUIREMENTS OF ANSI 118.4 AND/OR 118.15.

20. TYPICAL EPOXY GROUT SHALL BE 100% SOLIDS EPOXY GROUT BY LATICRETE (OR APPROVED EQUAL) EPOXY GROUT.

21. TYPICAL BONDING PRIMER SHALL BE MULTI-SURFACE BONDING PRIMER (MBP) BY CUSTOM BUILDING PRODUCTS (OR EQUAL).

22. TYPICAL SILICONE CAULK AND/OR SEALANT SHALL BE 100% SILICONE SEALANT BY CUSTOM BUILDING PRODUCTS (OR EQUAL).

23. PROVIDE 10% ATTIC STOCK FOR EACH TILE TYPE INDICATED.

RITTER-NORTON
ARCHITECTS
Professional Limited Liability Company

814 King Street, 3rd Floor
Alexandria, Virginia 22314
703.548.4405 t.
703.548.4910 f.
www.ritternorton.com

DC COURTS INTERIOR ALTERATION
2041 MARTIN LUTHER KING BLVD.SE
SUITE 400
WASHINGTON DC 20020

REVISIONS

95% CHECK SET

03.10.2020

SPECIFICATIONS

A003

Permit #:

Address: 2041 MARTIN LUTHER KING BLVD,SE SUITE X WASHINGTON DC 20020

Compliance Path Used: ☒ Prescriptive ☐ Trade Off ☐ Performance

Project Type: ☐ New Non-Residential Project ☐ Non-Residential Addition ☒ Renovation

Key: Mandatory for all Compliance Approaches as Relevant to the Scope of Work

Mandatory for Prescriptive Path

2013 DC Energy Code Sect. #	Pre-Inspection Section Description	Prescriptive Code Value	Plan Value	Designer Identified Dwg Page	Plan Review	Field Insp.
101.4.7.6, C402.4.1.2 SR	Plans, specifications, and calculations give info for air-barrier energy compliance. Assemblies meet ASTM E 2357, ASTM E 1667, other. Materials require sealed joints	N/A				
C403.2.1 SR	Provide Sum of All Exterior Wall Area in Square Feet	N/A				
C403.2.1 SR	Provide Sum of All Exterior Window Area in Square Feet	N/A				
C403.2.1 SR	Calculate Window to Wall Area (WWA) based on values above.	N/A				
C403.2.1 SR	If WWA> 30%, then prescriptive path cannot be used, unless exemption and calculations.	N/A				
C402.3.2 SR	In enclosed spaces > 10,000 ft2 directly under a roof with ceiling heights >15 ft. and typical daylime occupancies (See Code), the following requirements apply: (a) the min. daylight zone under skylights is >= half the floor area; (b) the min. skylight area to daylight zone is >= 3 percent with a skylight VT >= 0.40; or a minimum skylight effective aperture >= 1%. Potential exemptions apply.	N/A				
101.4.7.6 C406.2 MR	Plans, specifications, and calculations give info for mechanical energy compliance.	N/A				
C403.2.1 C403.2.2 MR	Load calculations per ASHRAE 183. Equipment sized to the smallest possible within available equipment options.	N/A				
101.4.7.6 C406.3 ER	Plans, docs, specs,/ calcs and exemption info. given for interior lighting systems and equipment.	N/A				
101.4.7.6 ER	Plans, docs, specs,/ calcs and exemption info. given for exterior lighting systems and equipment.	N/A				
C403.2.4.5 ER	Freeze protection and snow/ice melting system sensors for future connection to controls.	N/A				
C406 ER & MR	Project team selects one of three options. Advanced: 1) Lighting performance 2) HVAC performance (whole project area) QE. 3) Renewable Energy: 0.5 W/sqft for bldg OR 3% bldg hot water	N/A				

2013 DC Energy Code Sect. #	Foundation Inspections	Prescriptive Code Value	Plan Value	Identified Dwg Page	Plan Review	Field Insp.
C402.1.1 SR	Below Grade Insulation Wall Value.	R-7.5				
C303.2 INSP	Below Grade Insulation Wall installed per manufacturer's instructions	N/A	N/A			
C402.1.1 SR	Slab edge insulation value	Heated: R-15,24" Unheated: R-20,24"				
C303.2 INSP	Slab edge insulation installed per manufacturer instructions	N/A	N/A			
C403.2.7, C408.2.8, SR	Ext. insulation protected against damage, sunlight, moisture, wind, landscaping maintenance activities.	N/A				
C403.2.7 C403.2.8 MR	Piping, ducts and plenum are insulated and sealed when installed in or under a slab	N/A				
C402.2.8 M	Bottom surface of floor structures using radiant heating insulated to R-3.5	N/A	N/A			
C403.2.4 E	Freeze protection & snow/ice melting sys. sensors for future connection to controls.	N/A	N/A			

2013 DC Energy Code Sect. #	Framing/ Rough-in Inspection	Prescriptive Code Value	Plan Value/ Strategy	Identified Dwg Page	Plan Review	Field Insp.
C303.1.1.3 SR	Fenetration products are certified as to the performance labels or certificates.	N/A				
C402.4.1.2 SR	Continuous air-barrier is wrapped, sealed, caulked, gasketed, taped in approved manner. Assemblies meet ASTM E 2357, ASTM E 1677, or ASTM E 283	N/A	N/A			
C402.1.1 S	U-factor of opaque doors associated with the building themal envelope meets requirements.	Swinging: U-0.61 Non-Swing: R-4.75				
C303.1.1.3 S	Fenetration products rated in accordance with NFRC.	N/A				
C402.4.3 C402.4.4 S	Factory-built fenestration & doors are labeled as meeting air-leakage requirements.	N/A	N/A			
C402.4.7 S	Vestibules are installed where building entrances separate conditioned space from the exterior & meet exterior envelope requirements. Doors have self closing devices & are 7 feet apart.	N/A	N/A			
C402.4.3 C402.4.4 SR	Vertical Fenestration U-factor Fixed Fenestration Operable Fenestration: Entrance doors:	U-0.38 U-0.45 U-0.77				
C402.3 SR	Skylight Fenestration U-factor	U-0,50				
C402.3 SR	Skylight Fenestration SHGC:	SHGC-0.40				
C402.3 S	Vertical Fenestration SHGC value.	SHGC-0.40				

2013 DC Energy Code Sect. #	Plumbing Rough-in Inspection	Prescriptive Code Value	Plan Value/ Strategy	Designer Identified Dwg Page	Plan Review	Field Insp.
C404.6 MR	Automatic or manual switches installed to switch off the recirculating hot water system or heat trace.	N/A				
C404.3 M	Temp. controls installed on service water heating systems (<110 F to max. temp. range)	N/A				
C404.5 M	Recirculating service hot water pipes insulated. Under slab piping verified during Foundation Inspection.	1" ins. <=0.27 conductivity				
C404.4 M	Heat traps installed on non-circulating storage water tanks.	N/A				

2013 DC Energy Code Sect. #	Mechanical Rough-in Inspection	Prescriptive Code Value	Plan Value/ Strategy	# Systems	Designer Identified Dwg Page	Plan Review	Field Insp.
C403.2.5 MR	Demand control ventilation provided for spaces >500 ft2 & >25 ppl/1000 ft2 occupant density & served by systems with air side economizer, auto modulating outside air damper control or design air flow > 3,000 CFM	N/A					
C403.2.X(3) M	PTAC and PTHP with sleeves 16" by 42" labeled for replacement only.	N/A					
C402.4.5.1 M	Stair and elevator shaft vents have motorized dampers that automatically close.	N/A					
C402.4.5.2 M	Outdoor air and exhaust systems have motorized dampers that automatically shut when not in use & meet the maximum leakage rates. Check gravity dampers where allowed.	N/A					
C403.2.3 M	HVAC equipment regulated by Federal National Appliance Energy Conservation Act meets requirements.	See Code Tables					
C403.2.10 M	Each HVAC system with total fan motors ≥5HP does not exceed the allowable fan system mastor nameplate HP or the fans system brake horse power.	N/A					
C403.2.8.1 M	Insulation exposed to weather is protected from damage. Insulation outside of the conditioned space & assoc. with cooling systems is vapor retardant.	N/A					
C403.2.7 M	HVAC ducts and plenums insulated per space requirements.	Uncond. space R-6, Outside building R-8					
C403.2.8 M	HVAC piping insulation thickness. Table C403.2.8						
C403.2.8 M	Thermally ineffective panel surfaces of sensible heating panels have insulation ≥3.5	R-3.5					
C403.2.7 M	Ducts and Plenums sealed based on static pressure.	N/A					
C403.2.7.1.3 M	Ductwork operating > 3 in. w.g. requires air leakage testing.	N/A					
C403.2.6 MR	Exhuast air energy recovery on systems meeting Table C403.2.6	N/A					
C403.3.1 MR	Air economizers provided where required, meet the requiremtns for design capacity, control signal, and high-limit shut-off and integrated economizer control.	N/A					
C403.3.1.1.3 MR	Means provided to relieve excess outside air during economizer operation.	N/A					
C403.3.1 MR	Water economizers provided where required, meet the requirements for design capacity, maximum pressure drop and integrated economizer control and heating system impact.	N/A					
C403.4.1.4 MR	Economizer operation will not increase heating energy use during normal operation.	N/A					
C403.4.1.4 MR	Zone controls can limit simultaneous heating & cooling and sequence heating & cooling to each zone.	N/A					
C403.4.2 MR	VAV fan mostors>= 7.5 HP to be driven by variable speed drive, have vane-axial fan with variable pitch blades, or have controls to limit fan motor demand.	N/A					
C403.2.3 M	Hydronic heat pump systems connected to a common water loop meet heat rejection and heat addition requirements.	N/A					
C403.4.5 M	Dehumidification controls provided to prevent reheating, recooling, mixing of hot and cold airstreams or concurrent heating & cooling of the same airstream.	N/A					
C403.3.1 M	Water economizer specified on hydronic cooling & humidification systems designed to maintain inside humidity at >35 F dewpoint if an economizer is required.	N/A					

2013 DC Energy Code Sect. #	Mechanical Rough-in Inspection	Prescriptive Code Value	Plan Value/ Strategy	# Systems	Designer Identified Dwg Page	Plan Review	Field Insp.
C403.4.4 MR	Each fan powered motor >=7.5 HP, has capacity to automatically operate at ⅓ capacity for changed temp.	N/A					
C403.4.7 MR	Hot gas bypass systems limited to: <=240 kBtu/h - 50% >240 kBtu/h - 25%	N/A					
C403.4.2.1 M	VAV fans have static pressure sensors positioned so setpoint <= 1/3 total design pressure.	N/A					
C403.4.2.2 M	Reset static pressure setpoint for DDC controlled VAV boxes reporting to central controller based on the zones requiring the most pressure.	N/A					
C403.4.2.2 M	Multiple zone VAV systems with DDC of individual zone boxes have static pressure setpoint reset controls.	N/A					
C403.4.5 M	Multiple zone HVAC systems have supply air temperature reset controls.	N/A					
C403.4.3.2 M	Hydronic, two pipe heating and cooling system allow 15 deg F exterior temp., and 4 hour deadband between heating and cooling.	N/A					
C403.4.3.4 M	Temperature reset by representative building loads in hydronic chiller and boiler systems >= 300,000 Btu/h.	N/A					
C403.4.3.3 M	Two-position automatic valve interlocked to shut off water flow when hydronic heat pump with pumping system > 10 ls off.	N/A					
C403.4.3.3.1 M	Hydronic heat pumps shall have a water dead band of 20 deg. F between heat rejection and heat addition.	N/A					
C403.4.3. 3.2.1 M	Hydronic heat pump, heat rejection systems shall be able to bypass cooling tower or stop heat exchange.	N/A					
C403.4.3.4 M	Hydronic systems >=300 kBTUh shall either: reset water temp. by outside or zone temp. OR reduce pump flow by 50% via VFD, or other						
C403.4.3.5 M	Hydronic Pump isolation for systems w/ two or more chillers shall be included.	N/A					
C403.4.6 M	Condenser heat recovery system that can heat water to 85 F or provide 60% of peak heat rejection is installed for service hot water in ✱ facility, water cooled systems reject >6 MMBtu, and SHW >=1 MMBtu.	N/A					
C403.2.11 M	Unenclosed spaces that are heated use only radiant heat.	N/A					
C404.2 M	Service water heating equipment meets efficiency requirements.	N/A					

2013 DC Energy Code Sect. #	Electrical Rough-in Inspection	Prescriptive Code Value	Plan Value/ Strategy	Designer Identified Dwg Page	Plan Review	Field Insp.
C405.2.2.1 ER	Automatic lighting control to shut off all project lighting by a time of day schedule, an occupant sensor, or from another control alarm system.	N/A				
C405.2.1.1 ER	Independent lighting control readily accessible and visible to occupants.	N/A				
C405.2.1.2 ER	Independent lighting control has at least three steps: OFF, ON, and one step <=50% lighting power.	N/A				
C405.2.2.2 ER	An occupancy sensor or timer automatically turns off lights 30 min. after occupants leave. Applicable to: 1) classrooms/ lecture halls 2) conference/ meeting room 3) lunch or break room 4) storage/ janitorial rooms 5) office spaces 7) other spaces <=300 square feet or less. Manual On or Auto. On to 50% power	N/A				
C405.2.2.1 ER	For spaces not included in C405.2.1.1, control device shall be activated "on" manually or by an occupant sensor. Override of any scheduled shut off control is allowed for maximum of 2 hours.	N/A				
C405.2.2.3 ER	Area within the sidelighted daylight zones have daylighting controls. lighting controls.	N/A				
C405.2.2.3 ER	Enclosed spaces under skylights are equipped with required lighting controls separate from general lighting (15 ft. from skylight).	N/A				
C405.2.4 E	Automatic lighting controls for exterior lighting included in project.	N/A				
C405.4 ER	Exit signs do not exceed 5 watts per face.	5 Watts/Face				
C405.3 ER	Tandem wiring is required for recessed, fluorescent lamps within 10 feet of one another AND for pendant or surface mounted fluorescent lights mounted 1 foot edge to edge of one another.	N/A				
C405.5.2 ER	Ext. lighting >100W provides >60 lm/W unless on motion sensor	N/A				
C405.5.2 ER	Lighting Power Density is calculated by Building Area Method or Space by Space Method. Calcuations provided in plans.	N/A				
C405.2.3 ER	Sleeping units have at least one master switch at the main entry door that controls the wired luminaries and switched receptacles.	N/A				
C405.2.3 ER	Separate lighting control devices for specific uses installed per approved lighting plans.	N/A				

2013 DC Energy Code Sect. #	Final Inspection	Prescriptive Code Value	Plan Value/ Strategy	Designer Identified Dwg Page	Plan Review	Field Insp.
C402.4.6 SR	Weatherseals installed on all loading dock cargo doors in Climate Zones 4-8	N/A				
C403.2.4 M	Heating and cooling to each zone is controlled by a thermostat	N/A				
C403.2.4 M	Thermostatic controls have a 5 degree F deadband.	N/A				
C403.2.4 M	Temperature controls have setpoint overlap restrictions.	N/A				
C403.2.4.3 M	Each Zone equipped with setback controls using automatic time clock or programmable control system.	N/A				
C403.2.4.3 M	Auto. Controls: Setback to 55 deg F (heat) and 85 deg. F (cool); 7 day, 2 hour occupant override, 10-hour backup.	N/A				
C403.2.4 M	Minimum of one humidity control device per installed dehumidification/ humidification system	N/A				
C403.2.4 M	Systems include optimum start controls.	N/A				
C403.2.4.1.1 M	Heat pump controls prevent supplemental elect. resistance heat from coming on when not needed.	N/A				
C403.2.2 M	HVAC systems and equipment capacity does not exceed calculated loads.	N/A				
C404.3 M	Provide lavatory faucet temperature <= 110 deg. F.	110 Deg F				
C404.6 M	Automatic or manual controls are installed that limit the operation of a recirculating service water heating or heat trace in low demand times.	N/A				
C404.7.1 M	Pool heaters are equipped with on/off switch and no continuous burning pilot light.	N/A				
C404.7.3 M	Pool covers that are vapor retardant are provided for heated pools.	Vapor Retardant				
C404.7.2 M	Automatic time switches are installed on all pool heaters and pumps.	N/A				
C402.4.8 E	Recessed luminaries in thermal envelope to limit infiltration and be IC rated and labeled. Seal between interior finish and luminaire housing.	N/A				
C405.5.2 ER	Installed lamps and fixtures are consistent with what is shown on the approved lighting plans, which demonstrate proposed watts are less than or equal to allowed watts.	N/A	N/A			
C405.6 ER	Exterior lighting power demonstrated proposed watts are less than or equal to allowed watts.	N/A	N/A			
10.4.3 E	Elevators are designed with proper lighting, ventilation power, and standby mode.	N/A				

2013 DC Energy Code Sect. #	Insulation Inspection	Prescriptive Code Value	Plan Value/ Strategy	Designer Identified Dwg Page	Plan Review	Field Insp.
C402.4.1.2 SR	All sources of air leakage in the building thermal envelope are sealed, caulked, gasketed or weather stripped to minimize air leakage.	N/A				
C402.1.1 SR	Roof R-value. Above Deck: Metal: Attic:	R-25 c.i. R-19+R-11 R-38				
C303.2 SR	Roof insulation installed per manufacturer's instructions. Blown or poured loose fill insulation installed only where the roof slope >= 3/12	N/A				
C402.2.1 SR	Skylight curbs insulated to the level of roofs with insulation above deck or R-5.	N/A				
C402.2.1.1 SR	High-albedo roofs meet solar reflectance requirements of 0.70 & thermal emittance of 0.75 or SRI of 82.	N/A				
C402.1.1 SR	Above Grade wall insulation R-value. Mass: Metal Bldg: Steel-framed: Wood-framed:	R-9.5 c.i. R-13+R13ci R-13+R7.5ci R-20				
C303.2 INSP	Above Grade wall insulation installed per manufacturer's requirements.	N/A				
C402.1.1 SR	Floor insulation R-value. Mass: Steel-joist: Wood-framed:	R-10 c.i. R-30 R-30				
C303.2 INSP	Floor insulation installed per manufacturer's requirements.	N/A	N/A			
C303.1.2 INSP	Bldg. envelope insul. is labeled w/ R-val or insul. certificate.	N/A	N/A			
C303.2.1 S	Exterior insulation is protected from damage with protective material.	N/A				
C402.2.1 S	Thermal roof insulation cannot be installed on top of a suspended ceiling.	N/A				

DCRA Energy Verification Sheet

2013 DC Energy Code Non-Residential Version 1.0_2014

This Energy Verification Sheet is based on DOE's Store and Score spreadsheets and was adapted to fit the 2013 DC Energy Conservation Code. This verification sheet does not replace the 2013 DC ECC or ASHRAE 90.1-2010 and is included for DCRA to verify significant requirements during permitting and inspection. The project team shall design and install the building to the full energy code, irrespective of any one measure's existence on this sheet. The project team shall also include this document into their drawings and fill it in for applicable projects.

Directions: Each trade shall be responsible for filling out the sections of this page that are applicable to their discipine. Architects should fill out any code section starting with "S" or "SR", Mechanical trades should fill out any section starting with "M" or "MR," and Electrical should fill out any section starting with "E" or "ER." Every row must be completed to have compliant documentation. The design team is responsible for filling out the "Plan Value," "Identified Drawing Page," and "# Systems" columns. The "Identified Drawing Page" means that the page number associated with the project should be input that shows how compliance is being met. Should a measure be not applicable to the project scope, then the project team may place "N/A" (not applicable) or cross out the cells for every cell in that row. Exemptions to measures are not included in this verification sheet, so it is up to the design team to read the code for applicable exemptions and place "Exempt per Section (insert code section # here)."Projects using the Performance Path (energy modeling) need to fill in only the light gray highlighted, mandatory rows. Other Compliance Approaches require filing in all rows. Completion of this page does not absolve project teams from providing other energy verification documentation. The "Plan Review" and "Field Insp." columns are for Plan Reviewers and Field Inspectors only (with the exemption of crossing out the cells for measures not in the scope of work. Plan Reviewers and Field inspectors should sign off on each item they inspected and confirm compliance. Photos of the completed sheets must be sent in to DCRA for storage.

EN-1

RITTER-NORTON ARCHITECTS
Professional Limited Liability Company

814 King Street, 3rd Floor
Alexandria, Virginia 22314
703.548.4405 t.
703.548.4910 f.
www.ritternorton.com

DC COURTS INTERIOR ALTERATION
2041 MARTIN LUTHER KING BLVD,SE
SUITE 400
WASHINGTON DC 20020

REVISIONS

95% CHECK SET

03.10.2020

ENERGY VERIFICATION

A004

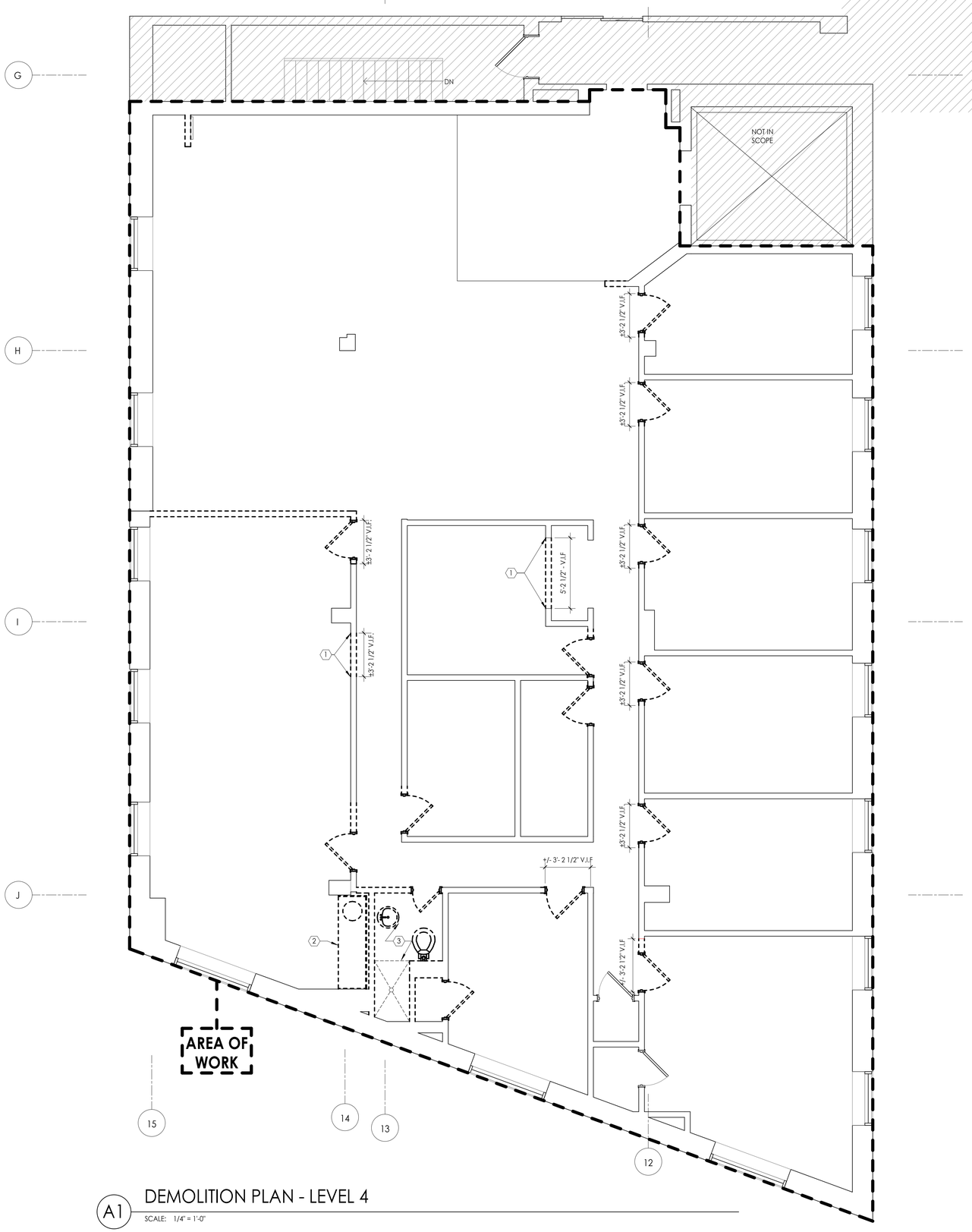

A1 DEMOLITION PLAN - LEVEL 4

SCALE: 1/4" = 1'-0"

GENERAL SHEET NOTES

A. DEMOLISH (E) PARTITIONS AS INDICATED BY DASHED LINES AND AS REQUIRED TO ACCOMPLISH WORK, U.N.O.

B. DEMOLISH ALL DOORS & FRAMES SELECTIVELY DEMOLISH PARTITIONS ADJACENT TO (E) DOORS & FRAMES TO ACCOMODATE NEW WIDER DOORS. REFFER TO DOOR SCHEDULE ON A601

C. DEMOLISH ALL (E) WALL BASE AND (E) CARPET THROUGHOUT AREA OF WORK.

D. REMOVE ALL (E) DEMOLISHED NON-FUNCTIONING ELECTRICAL RECEPTACLES, SWITCHES, COMMUNICATION AND COMPUTER OUTLETS AND BLANK PLATES FROM AREA OF WORK. PATCH AND PAINT TO MATCH ADJACENT CONDITIONS, V.I.F.

E. REMOVE ALL INACTIVE AND/OR ABANDONED MATERIALS SUCH AS: DEVICES, WIRING, CONDUIT, PIPE, DUCTWORK, HANGERS, ETC. TO LEAVE THE STRUCTURE CLEAN AND CLEAR FOR NEW CONSTRUCTION. ALL MATERIALS SHALL BE REMOVED TO THE LAST POINT OF ACTIVE SERVICE, OR AT MINIMUM, 6-INCHES OUTSIDE THE AREA OF WORK BEING RENOVATED, AND ALL HOLES RESEALED. WHERE OUTSIDE OF SPACE BEING RENOVATED IS TOO CONGESTED TO REMOVE MATERIALS, PORTIONS OF THE WALL SHALL BE REMOVED TO GAIN ACCESS IN ORDER TO DEMOLISH MATERIALS OUTSIDE THE SPACE. ALL METAL GALVANIZED PARTITIONS AND WOOD BLOCKING ARE TO BE REMOVED FROM ABOVE CEILING.

F. THE CONTRACTOR SHALL BE RESPONSIBLE TO FIELD VERIFY ALL WALLS AND OTHER ITEMS TO BE DEMOLISHED AND INCLUDE FULL AND COMPLETE DEMOLITION OF THOSE ITEMS IN THEIR PROPOSAL.

G. ALL (E) WINDOW TREATMENTS SHALL BE BAGGED AND PROTECTED FROM DAMAGE DURING CONSTRUCTION ACTIVITIES, U.N.O.

H. CONTRACTOR SHALL PROVIDE MASONITE BOARD TO PROTECT THE CORRIDOR CARPETING/VCT DURING RENOVATION AND USE NON-RESIDUE TAPE. COORDINATE EXTENT WITH CONSTRUCTION MANAGER.

I. DEMOLISH ALL (E) FIXTURES, DEVICES, CEILING SYSTEM, AND GYP. BD. BULKHEAD, AS INDICATED BY DASHED LINES, AND AS REQUIRED TO ACCOMPLISH WORK. COORDINATE DEMOLITION WITH WORK SHOWN ON MECHANICAL, ELECTRICAL, AND FIRE PROTECTION SHEETS.

J. PROTECT ALL FIRE ALARM SYSTEM DEVICES - SPEAKERS, STROBES, HEAT AND SMOKE DETECTORS, REMOTE LEDS, INDICATED TO REMAIN FROM DAMAGE DURING CONSTRUCTION ACTIVITIES.

K. PROTECT (E) SPRINKLER HEADS TO REMAIN OR TO BE RELOCATED FROM DAMAGE DURING CONSTRUCTION ACTIVITIES.

L. REFER TO M-E-P DRAWINGS FOR ADDITIONAL INFORMATION.

SHEET KEYNOTES - DEMOLITION PLAN

1 SELECTIVELY DEMOLISH (E) PARTITION TO ACCOMODATE NEW DOOR AND FRAME

2 DEMO (E) COUNTERTOP, SINK AND ASSOCIATED FIXTURES

3 DEMO (E) RESTROOM AND SHOWER IN IT'S ENTIRETY

RITTER•NORTON
ARCHITECTS
Professional Limited Liability Company

814 King Street, 3rd Floor
Alexandria, Virginia 22314
703.548.4405 t.
703.548.4910 f.
www.ritternorton.com

DC COURTS INTERIOR ALTERATION
2041 MARTIN LUTHER KING BLVD.SE
SUITE 400
WASHINGTON DC 20020

REVISIONS

95% CHECK SET

03.10.2020

DEMOLITION PLANS

A101

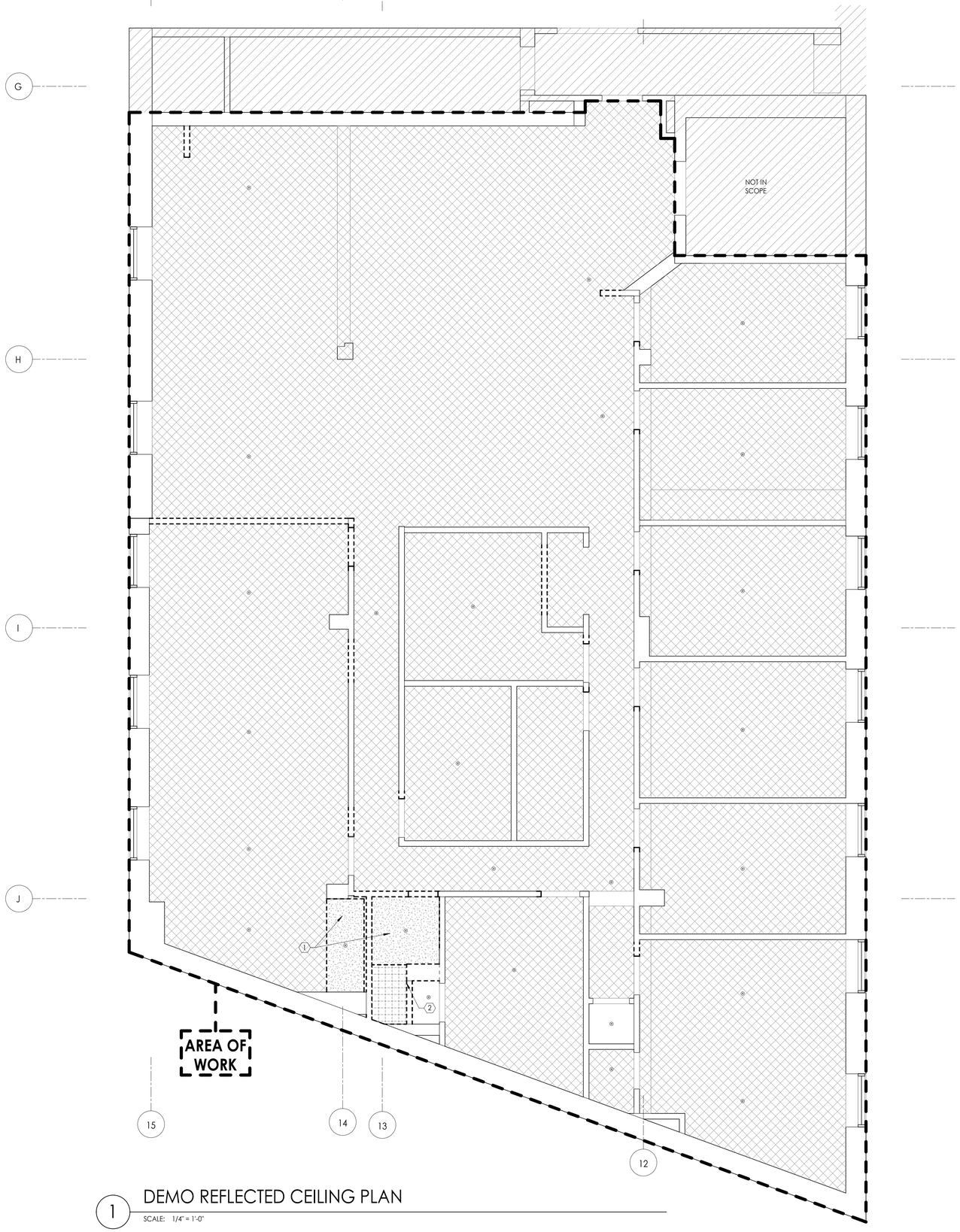

1 DEMO REFLECTED CEILING PLAN

SCALE: 1/4" = 1'-0"

GENERAL SHEET NOTES

A. THE CONTRACTOR SHALL BE RESPONSIBLE TO FIELD VERIFY ALL WALLS AND OTHER ITEMS TO BE DEMOLISHED AND INCLUDE FULL AND COMPLETE DEMOLITION OF THOSE ITEMS IN THEIR PROPOSAL.

B. ALL (E) WINDOW TREATMENTS SHALL BE BAGGED AND PROTECTED FROM DAMAGE DURING CONSTRUCTION ACTIVITIES, U.N.O.

C. DEMOLISH ALL (E) FIXTURES, DEVICES, CEILING SYSTEM, AND GYP. BD. BULKHEAD, AS INDICATED BY DASHED LINES, AND AS REQUIRED TO ACCOMPLISH WORK. COORDINATE DEMOLITION WITH WORK SHOWN ON MECHANICAL, ELECTRICAL, AND FIRE PROTECTION SHEETS.

D. PROTECT ALL FIRE ALARM SYSTEM DEVICES - SPEAKERS, STROBES, HEAT AND SMOKE DETECTORS, REMOTE LEDS, INDICATED TO REMAIN FROM DAMAGE DURING CONSTRUCTION ACTIVITIES.

E. REMOVAL AND RELOCATION OF SECURITY DEVICES WILL BE DONE BY OTHERS. THE CONTRACTOR WILL PROVIDE THE POWER, AND THE ROUGH-IN FOR THE RELOCATED AND/OR NEW SECURITY SYSTEM. COORDINATE EXACT LOCATIONS WITH USG.

F. PROTECT (E) SPRINKLER HEADS TO REMAIN OR TO BE RELOCATED FROM DAMAGE DURING CONSTRUCTION ACTIVITIES.

G. REFER TO M-E-P DRAWINGS FOR ADDITIONAL INFORMATION

KEYNOTES - DEMOLITION REFLECTED CEILING PLAN

1	SELECTIVELY DEMOLISH (E) GYP. BD. CEILING AS INDICATED.
2	DEMOLISH CERAMIC CEILING TILE

REFLECTED CEILING PLAN LEGEND

SYMBOL		DESCRIPTION
EXIST.	NEW	
		RETURN DIFFUSER
		SUPPLY DIFFUSER
		EXIT SIGN
		COMBINATION AUDIBLE & VISUAL FIRE ALARM
		SPRINKLER HEAD

DEMO TILE

DEMO GYP. BD. CELING.

(E) OPEN CEILING WITH EXPOSED STRUCTURE, DUCTS, & PIPES. NO EXISTING FINISH CEILING

RITTER-NORTON
ARCHITECTS
Professional Limited Liability Company

814 King Street, 3rd Floor
Alexandria, Virginia 22314
703.548.4405 t.
703.548.4910 f.
www.ritternorton.com

DC COURTS INTERIOR ALTERATION
2041 MARTIN LUTHER KING BLVD.SE
SUITE 400
WASHINGTON DC 20020

REVISIONS

95% CHECK SET

03.10.2020

DEMO REFLECTED CEILING PLAN

A102

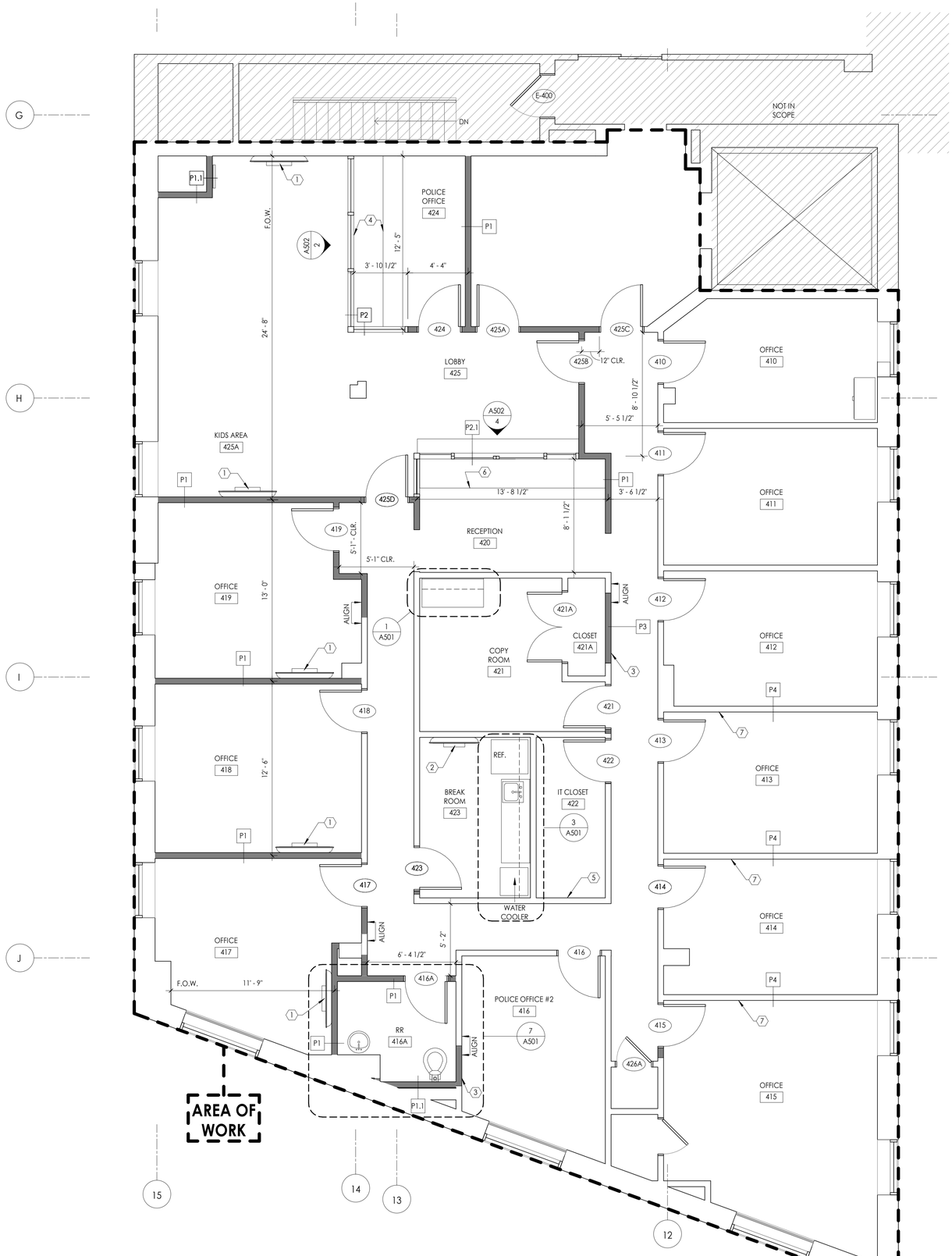

A1 LEVEL 4 -EXISTING

SCALE: 1/4" = 1'-0"

GENERAL SHEET NOTES

A. CODE REVIEWER NOTE FOR INFORMATION ONLY; ALL EGRESS DOORS PERMIT FREE EGRESS IN THE DIRECTION OF EGRESS TRAVEL. ALL SUITE DOORS ARE ADA COMPLIANT.

B. PAINT ALL NEW AND EXISTING GYPSUM BOARD SURFACES, AND WINDOW INDUCTION UNITS, AFFECTED BY CONSTRUCTION, WITHIN AREA OF WORK, V.I.F. SEE FINISH SCHEDULE, SHEET A-602.

C. PATCH AND REPAIR ALL EXISTING DAMAGED WALLS THROUGHOUT AREA OF WORK AS REQUIRED FOR SMOOTH EVEN FINISH. THE CONTRACTOR SHALL FIELD VERIFY THE SPACE PRIOR TO BID TO ESTABLISH THE EXTENT OF WORK REQUIRED. PAINT ALL PATCHED WALLS TO MATCH ADJACENT WALLS, INCLUDING AREAS ABOVE CEILING.

D. SEE DETAIL A1/A-501 FOR BUILDING STANDARD MOUNTING HEIGHTS.

E. PROVIDE FINISHES AS INDICATED IN THE FINISH SCHEDULE, SHEET A-602.

F. ALL PLYWOOD AND WOOD BLOCKING SHALL BE UL LISTED FIRE RETARDANT TREATED.

G. ALL DIMENSIONS ARE TO THE CENTERLINE OF NEW WALLS, U.N.O.

H. CONTRACTOR SHALL UNBAG AND CLEAN ALL BLINDS AT COMPLETION OF PROJECT.

I. REFER TO M-E-P DRAWINGS FOR ADDITIONAL INFORMATION.

J. INTERIOR STOREFRONT BY SPACE PLUSOF THE SLIDING DOOR COMPANY OR APPROVED EQUAL. PROVIDE FTS DOUBLE TRACK, 3" FRAME, SYSTEM WITH PASS THROUGH, 1/2" TEMPERED GLASS WINDOWS. FINISH TBD.

SHEET KEYNOTES - CONSTRUCTION PLAN

1 PROVIDE KERF BLOCKING INTO STUDS WITH 3/4" PLYWOOD BEHIND FINISHED GYP. BP. TOP OF 50" DISPLAY TO BE MOUNTED @78 3/4" AFF. CENTER OF DISPLAY @66" AFF AND BOTTOM OF DISPLAY @53 1/4" AFF REFER TO DETAIL 2/A502

2 PROVIDE KERF BLOCKING INTO STUDS WITH 3/4" PLYWOOD BEHIND FINISHED GYP. BP. TOP OF 43" DISPLAY TO BE MOUNTED @84 3/4" AFF. CENTER OF DISPLAY @72" AFF AND BOTTOM OF DISPLAY @59 1/4" AFF. REFER TO DETAIL 2/A502

3 INFILL OPENING TO MATCH ADJACENT (E) PARTITION REFER TO PARTITION TYPE P3 ON A502

4 BUILT-IN COUNTER & INTERIOR STOREFRONT, DIVIDE STOREFRONT INTO 3 EQUAL PARTS. REFER TO DETAIL 8/501.

5 PROVIDE 4'x8'X3/4" FIRE RATED PLYWOOD BACKBOARD MOUNTED @2" AFF

6 BUILT-IN COUNTER & INTERIOR STOREFRONT. SEE DETAIL 4/A502 & INTERIOR ELEVATION 3/A502

7 (E) FLOOR TO CEILING PARITION TO BE EXTENDED TO DECK. REFER TO PARTITION TYPE P3 ON A502.

RITTER-NORTON
ARCHITECTS
Professional Limited Liability Company

814 King Street, 3rd Floor
Alexandria, Virginia 22314
703.548.4405 t.
703.548.4910 f.
www.ritternorton.com

DC COURTS INTERIOR ALTERATION

2041 MARTIN LUTHER KING BLVD.SE
SUITE 400
WASHINGTON DC 20020

REVISIONS

95% CHECK SET

03.10.2020

CONSTRUCTION PLAN

A103

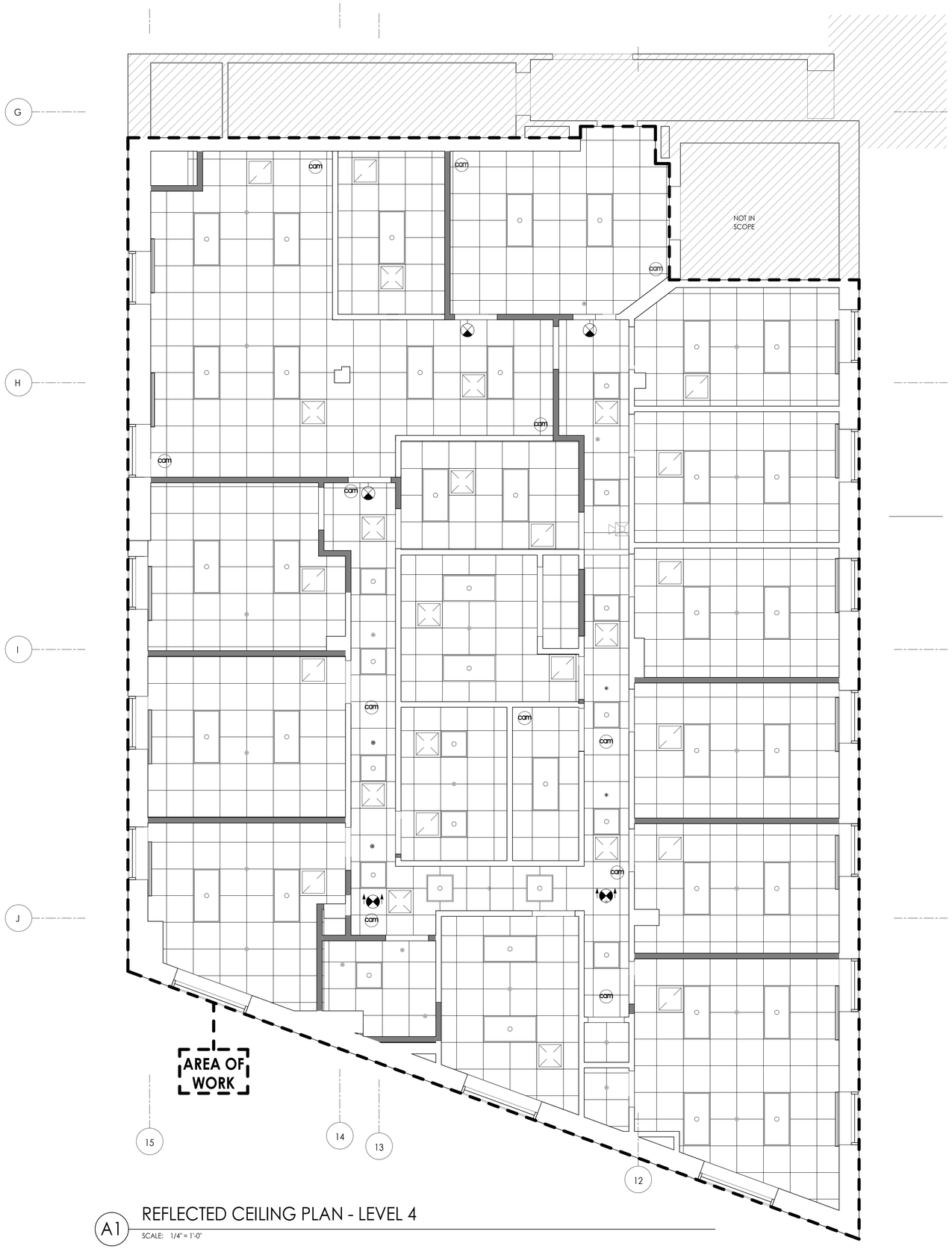

A1 REFLECTED CEILING PLAN - LEVEL 4

SCALE: 1/4" = 1'-0"

GENERAL SHEET NOTES

A. PROVIDE FINISHES AS INDICATED IN THE FINISH SCHEDULE, SHEET A602.

B. CEILING MOUNTED CAMERAS SHOWN GENERICALLY FOR COORDINATION PURPOSES ONLY. CAMERAS SHALL NOT TO BLOCK FIRE ALARM OR LIFE SAFETY DEVICES, TO BE INSTALLED BY TENANT SECURITY VENDOR.

C. MODIFY NEW CEILING GRID AS NECESSARY TO ACCOMMODATE ALTERATIONS TO ARCHITECTURAL, MECHANICAL, ELECTRICAL, AND PLUMBING WORK. COORDINATE WITH ARCHITECTURAL PLANS AND MEP DRAWINGS.

D. ALL NEW FIXTURES TO BE CENTERED IN CEILING TILES, U.N.O

E. PROTECT (E) SPRINKLER HEADS TO REMAIN OR TO BE RELOCATED FROM DAMAGE DURING CONSTRUCTION ACTIVITIES. CONTRACTOR SHALL CENTER SPRINKLER HEADS IN CEILING TILES.

F. REFER TO M-E-P DRAWINGS FOR ADDITIONAL INFORMATION.

REFLECTED CEILING PLAN LEGEND

SYMBOL			DESCRIPTION
EXIST.	DEMO	NEW	
			RECESSED 2'X2' LUMINAIRE
			RECESSED 2'X4' LUMINAIRE
			RETURN DIFFUSER
			SUPPLY DIFFUSER
			EXHAUST FAN
			EXIT SIGN
			COMBINATION AUDIBLE & VISUAL FIRE ALARM
			SPRINKLER HEAD
		cam	CAMERA
			AC1

RITTER-NORTON
ARCHITECTS
Professional Limited Liability Company

814 King Street, 3rd Floor
Alexandria, Virginia 22314
703.548.4405 t.
703.548.4910 f.
www.ritternorton.com

DC COURTS INTERIOR ALTERATION
2041 MARTIN LUTHER KING BLVD.SE
SUITE 400
WASHINGTON DC 20020

REVISIONS

95% CHECK SET

03.10.2020

NEW REFLECTED CEILING PLAN

A104

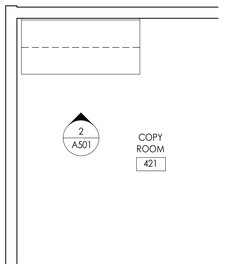

1 COPY ROOM - PLAN

SCALE: 3/8" = 1'-0"

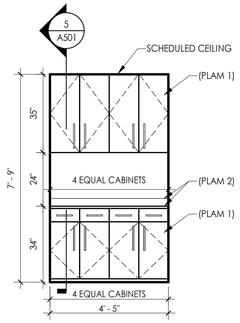

2 COPY ROOM ELEVATION

SCALE: 3/8" = 1'-0"

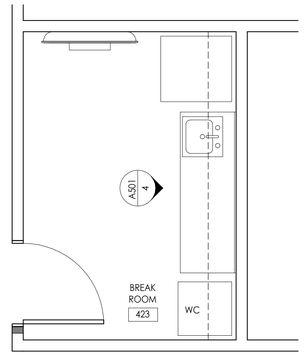

3 BREAK ROOM MILLWORK PLAN

SCALE: 3/8" = 1'-0"

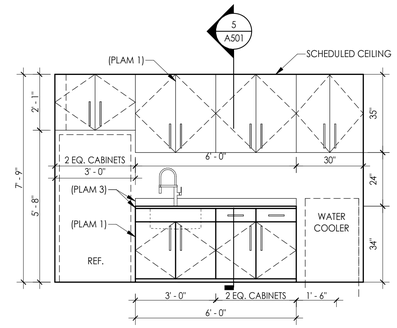

4 BREAK ROOM MILLWORK ELEVATION

SCALE: 3/8" = 1'-0"

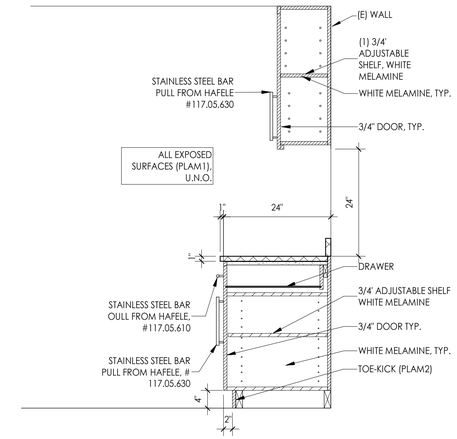

5 TYP. MILLWORK SECTION

SCALE: 3/4" = 1'-0"

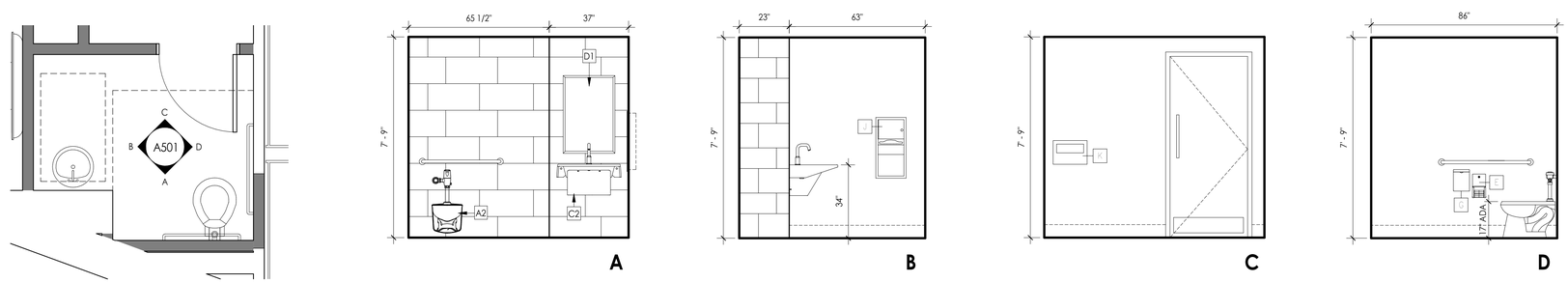

7 ENLARGED TOILET PLAN AND INTERIOR ELEVATIONS

SCALE: 3/8" = 1'-0"

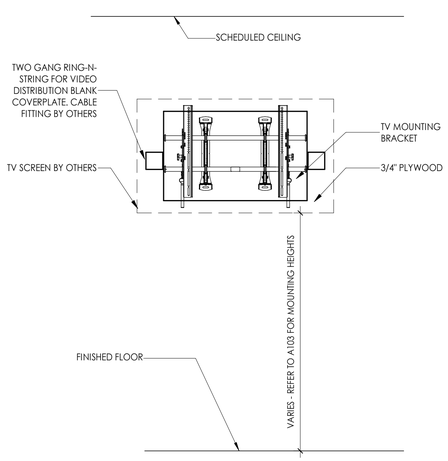

6 Typical Elevation at TV

SCALE: 3/4" = 1'-0"

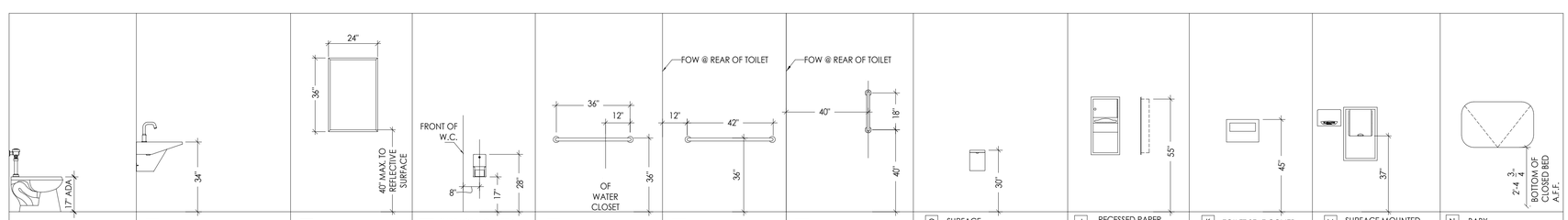

A1 ACCESSIBLE W.C. FLOOR MOUNTED SEE PLUMBING DWGS; WHITE; MOUNTED WITH AUTOMATIC FLUSH; HARDWIRED	C1 SINK - SEE PLUMBING DWGS; COLOR T.B.D.; WITH SENSOR OPERATED LIQUID SOAP DISPENSER FAUCET - SEE PLUMBING DWGS; SENSOR OPERATED; BATTERY	D1 FRAMED MIRROR BOBRICK; B-165 2436; 24"X36"	E SURFACE MOUNTED TOILET PAPER DISPENSER BOBRICK; B-2888; SATIN FINISH	F1 REAR WALL GRAB BAR BOBRICK; B-6806x36; SATIN FINISH	F2 SIDE WALL GRAB BAR BOBRICK; B-6806x42; SATIN FINISH	F3 VERTICAL GRAB BAR BOBRICK; B-6806x18; SATIN FINISH	G SURFACE MOUNTED SANITARY NAPKIN DISPOSAL BOBRICK; B-270; SATIN FINISH	J RECESSED PAPER TOWEL DISPENSER/WASTE RECEPTACLE BOBRICK; B-369; SATIN FINISH	K TOILET SEAT COVER DISPENSER BOBRICK; B-221; SATIN FINISH	M SURFACE MOUNTED HAND DRYER & ADA COMPLIANT RECESS KIT EXCEL XLERATOR DRYER; XL-SB 110/120; ADA COMPLIANT RECESS KIT - 40502	N BABY CHANGING STATION KOALA KARE; KB200-01SS; BRUSHED SS.

9 WC TOILET SCHEDULE

SCALE: 3/8" = 1'-0"

RITTER-NORTON
ARCHITECTS
Professional Limited Liability Company

814 King Street, 3rd Floor
Alexandria, Virginia 22314
703.548.4405 t.
703.548.4910 f.
www.ritternorton.com

DC COURTS INTERIOR ALTERATION

2041 MARTIN LUTHER KING BLVD.SE
SUITE 400
WASHINGTON DC 20020

REVISIONS

95% CHECK SET

03.10.2020

ARCHITECTURAL DETAILS AND ELEVATIONS

A501

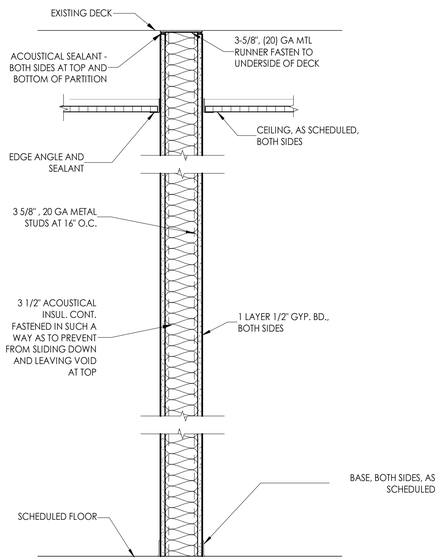

P1

P1.1 : 1 LAYER 1/2" GYP. BD. ONLY ON EXPOSED SIDE

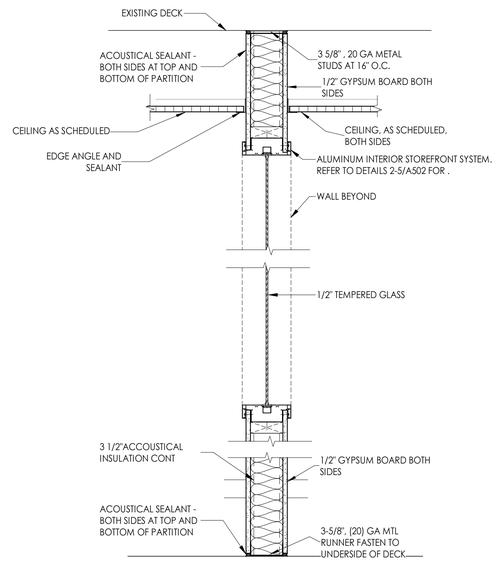

P2

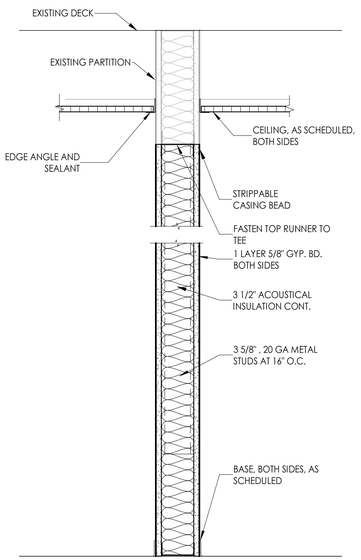

P3

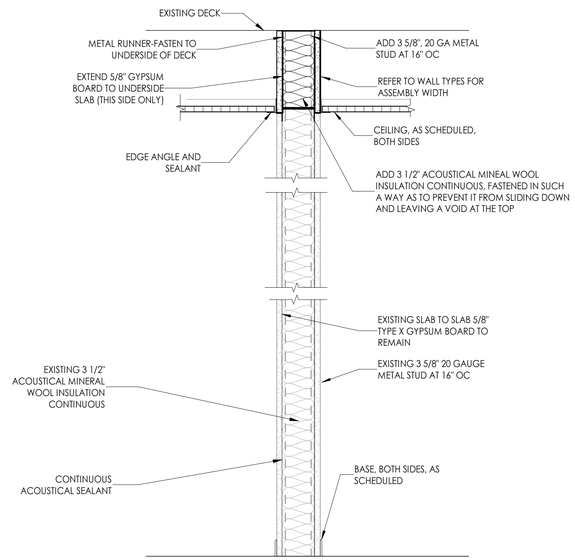

P4

1 Partition Types

SCALE: 1 1/2" = 1'-0"

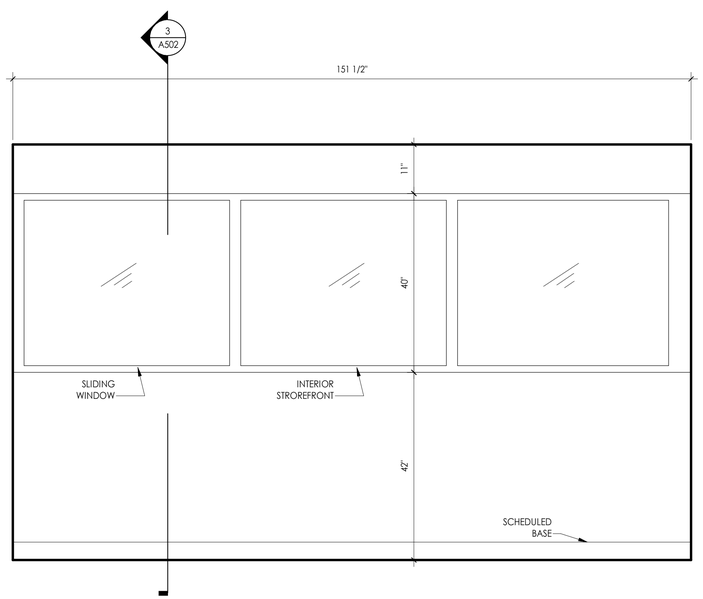

2 POLICE OFFICE ELEVATION

SCALE: 3/4" = 1'-0"

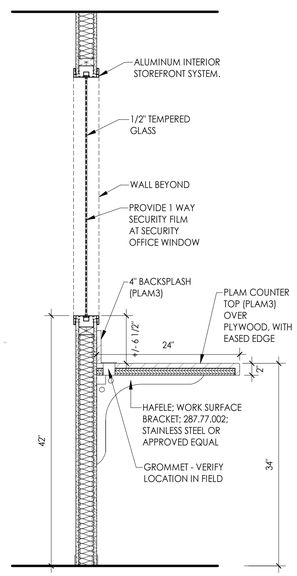

3 Police Office Detail

SCALE: 1" = 1'-0"

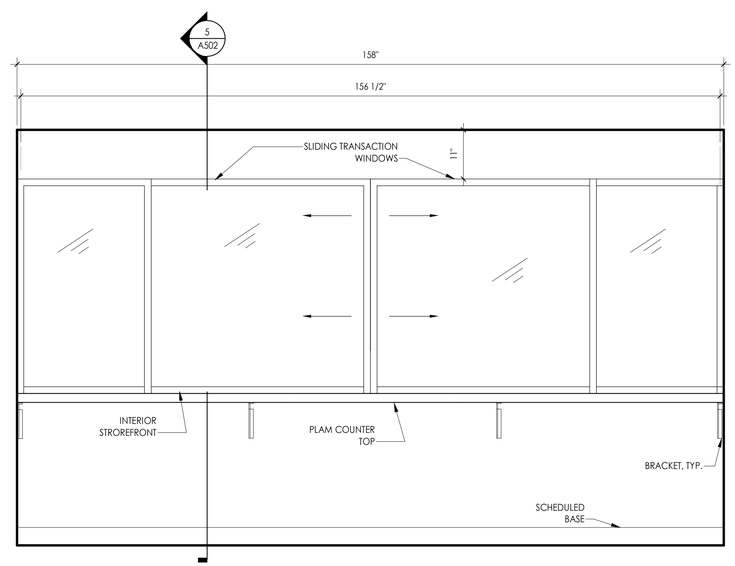

4 Reception Elevation

SCALE: 3/4" = 1'-0"

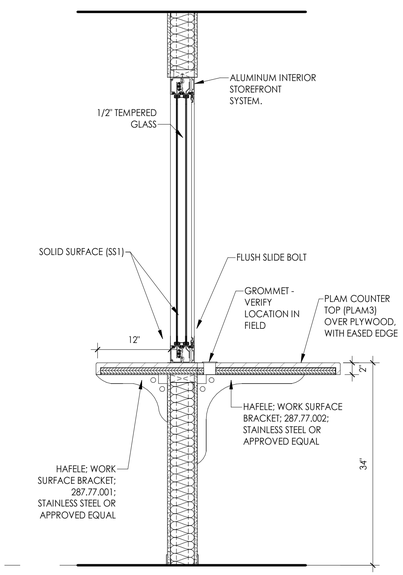

5 Reception Detail

SCALE: 1" = 1'-0"

RITTER-NORTON
ARCHITECTS
Professional Limited Liability Company

814 King Street, 3rd Floor
Alexandria, Virginia 22314
703.548.4405 t.
703.548.4910 f.
www.ritternorton.com

DC COURTS INTERIOR ALTERATION

2041 MARTIN LUTHER KING BLVD.SE
SUITE 400
WASHINGTON DC 20020

REVISIONS

95% CHECK SET

03.10.2020

PARTITION TYPES AND DETAILS

A502

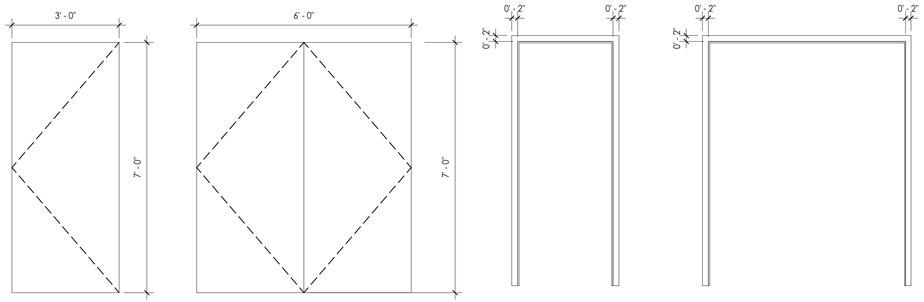

D1
FLUSH PANEL
PAINTED WOOD DOOR

D2
FLUSH PANEL
PAINTED WOOD DOOR

F1
HOLLOW METAL

F2
HOLLOW METAL

1 DOOR TYPES

SCALE: 1/2" = 1'-0"

DOOR SCHEDULE

DOOR NO.	DOOR SIZE WIDTH	DOOR SIZE HEIGHT	DOOR SIZE THICKNESS	DOOR MATERIAL	DOOR FINISH	HARDWARE SET	FRAME MATERIAL	FRAME FINISH	FRAME DETAILS HEAD	FRAME DETAILS JAMB	FRAME DETAILS SILL	ASSEMBLY FIRE RATING LABEL	REMARKS
2C40KK	2' - 6"	6' - 9"	0' - 1 3/4"										
410	3' - 0"	6' - 8"	0' - 1 3/4"	D1	P3	HW2	F1	P2	DH1	DJ2			
411	3' - 0"	6' - 8"	0' - 1 3/4"	D1	P3	HW2	F1	P2	DH1	DJ2			
412	3' - 0"	6' - 8"	0' - 1 3/4"	D1	P3	HW2	F1	P2	DH1	DJ2			
413	3' - 0"	6' - 8"	0' - 1 3/4"	D1	P3	HW2	F1	P2	DH1	DJ2			
414	3' - 0"	6' - 8"	0' - 1 3/4"	D1	P3	HW2	F1	P2	DH1	DJ2			
415	3' - 0"	6' - 8"	0' - 1 3/4"	D1	P3	HW2	F1	P2	DH1	DJ2			
416	3' - 0"	6' - 8"	0' - 1 3/4"	D1	P3	HW2	F1	P2	DH1	DJ2			
416A	3' - 0"	6' - 8"	0' - 1 3/4"	D1	P3	HW3	F1	P2	DH1	DJ2			
417	3' - 0"	6' - 8"	0' - 1 3/4"	D1	P3	HW2	F1	P2	DH1	DJ2			
418	3' - 0"	6' - 8"	0' - 1 3/4"	D1	P3	HW2	F1	P2	DH1	DJ2			
419	3' - 0"	6' - 8"	0' - 1 3/4"	D1	P3	HW2	F1	P2	DH1	DJ2			
421	3' - 0"	6' - 8"	0' - 1 3/4"	D1	P3	HW2	F1	P2	DH1	DJ2			
421A	5' - 0"	6' - 8"	0' - 1 3/4"	D2	P3	HW5	F2	P2	DH1	DJ2			
422	3' - 0"	6' - 8"	0' - 1 3/4"	D1	P3	HW2	F1	P2	DH1	DJ2			
423	3' - 0"	6' - 8"	0' - 1 3/4"	D1	P3	HW2	F1	P2	DH1	DJ2			
424	3' - 0"	6' - 8"	0' - 1 3/4"	D1	P3	HW2	F1	P2	DH1	DJ2			
425A	3' - 0"	6' - 8"	0' - 1 3/4"	D1	P3	HW4	F1	P2	DH1	DJ2			
425B	3' - 0"	6' - 8"	0' - 1 3/4"	D1	P3	HW2	F1	P2	DH1	DJ2			
425C	3' - 0"	6' - 8"	0' - 1 3/4"	D1	P3	HW4	F1	P2	DH1	DJ2			
425D	3' - 0"	6' - 8"	0' - 1 3/4"	D1	P3	HW2	F1	P2	DH1	DJ2			
426A	2' - 6"	6' - 9"	0' - 1 3/4"	(E)	P3	HW6	F1	P2	DH1	DJ2			
E-400	3' - 0"	6' - 8"	0' - 1 3/4"	(E)	(E)	HW1	(E)	(E)	(E)	(E)			

DOORS HARDWARE SETS

ALL HARDWARE TO MATCH BUILDING STANDARDS, U.N.O., V.I.F.

(E) / MODIFIED HARDWARE SET

(E) HARDWARE SET 1: STAIR EGRESS DOOR

3 HINGES
1 RIM PUSH PANIC HARDWARE, (PUSH SIDE)
1 CLOSER (W/ STOP FUNCTION)
1 THRESHOLD

NEW HARDWARE SETS

HARDWARE SET 2: OFFICE

3 HINGES
1 LEVER OFFICE LOCKSET
1 WALL STOP
3 SILENCERS

HARDWARE SET 3: TOILET

3 HINGES
1 LEVER PRIVACY LOCKSET
1 WALL STOP
3 SILENCERS

HARDWARE SET 6: CLOSET DOOR

3 HINGES
1 DUMMY LEVERS
3 SILENCERS

HARDWARE SET 4: SE ENTRY DOOR

2 HINGES
1 ELECTRIFIED HINGE
1 LEVER LOCKSET, CARD READER
1 CLOSER (W/ STOP FUNCTION)
2 SILENCERS

HARDWARE SET 5: CLOSET DOOR

6 HINGES
2 DUMMY LEVERS
6 SILENCERS

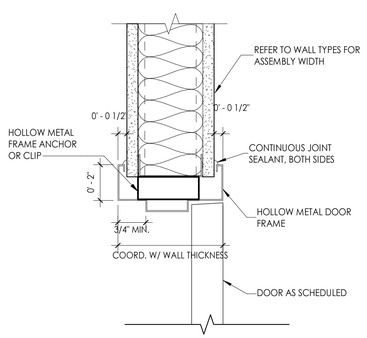

3 Door Head Gyp. BD

SCALE: 3" = 1'-0"

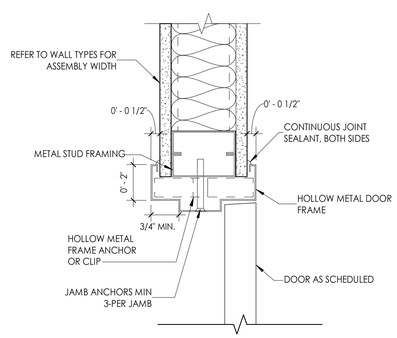

2 Door Jamb Gyp. BD

SCALE: 3" = 1'-0"

RITTER•NORTON
ARCHITECTS
Professional Limited Liability Company

814 King Street, 3rd Floor
Alexandria, Virginia 22314
703.548.4405 t.
703.548.4910 f.
www.ritternorton.com

DC COURTS INTERIOR ALTERATION
2041 MARTIN LUTHER KING BLVD.SE
SUITE 400
WASHINGTON DC 20020

REVISIONS

95% CHECK SET

03.10.2020

DOORS TYPES, SCHEDULE AND DETAILS

A601

ROOM FINISH										
		FLOOR		WALLS				CEILING		
ROOM NO.	ROOM NAME	FLOOR	BASE	PLAN NORTH	PLAN SOUTH	PLAN WEST	PLAN EAST	FINISH	HEIGHT	REMARKS
400	CORE ELEVATOR LOBBY	C2	B2	P1	P1	P1	P1	AC1		
401	WAITING	C1	B1	P1	P1	P1	P1	AC1		
410	OFFICE	C1	B1	P1	P1	P1	P1	AC1		
411	OFFICE	C1	B1	P1	P1	P1	P1	AC1		
412	OFFICE	C1	B1	P1	P1	P1	P1	AC1		
413	OFFICE	C1	B1	P1	P1	P1	P1	AC1		
414	OFFICE	C1	B1	P1	P1	P1	P1	AC1		
415	OFFICE	C1	B1	P1	P1	P1	P1	AC1		
415A	CLOSET	C1	B1	P1	P1	P1	P1	AC1		
416	POLICE OFFICE #2	C1	B1	P1	P1	P1	P1	AC1		
416A	RR	CT1		P1	P1	P1	P1	AC1		
417	OFFICE	C1	B1	P1	P1	P1	P1	AC1		
418	OFFICE	C1	B1	P1	P1	P1	P1	AC1		
419	OFFICE	C1	B1	P1	P1	P1	P1	AC1		
420	RECEPTION	C1	B1	P1	P1	P1	P1	AC1		
421	COPY ROOM	C1	B1	P1	P1	P1	P1	AC1		
421A	CLOSET	C1	B1	P1	P1	P1	P1	AC1		
422	IT CLOSET	C1	B1	P1	P1	P1	P1	AC1		
423	BREAK ROOM	VCT1	B1	P1	P1	P1	P1	AC1		
424	POLICE OFFICE	C1	B1	P1	P1	P1	P1	AC1		
425	LOBBY	C1	B1	P1	P1	P1	P1	AC1		
425A	KIDS AREA	C1	B1	P1	P1	P1	P1	AC1		
426A	CLOSET	C1	B1	P1	P1	P1	P1	AC1		

GENERAL SHEET NOTES

A. PAINT ALL PRIVATE OFFICE DOORS AND FRAMES IN AREA OF WORK (P2) ON CORRIDOR SIDE NLY, U.N.O.

FINISH SCHEDULE LEGEND

ALL FINISHES SHALL BE INSTALLED PER MANUFACTURERS INSTALLATION INSTRUCTIONS.

WALLS:

B1 WALL BASE: JOHNSONITE; #63 (BURNT UMBER); 4" COVE BASE

B2 WALL BASE: BUILDING STANDARD

CT1 (BATHROOM WALL) PORCELAIN TILE: CERAMIC PIEMME - PIEMMEGRES, MORE, BIANCO MATTE, 12X24. MOSAIC TILE CO.

FLOORING:

C1 BROADLOOM CARPET, SHAW CONTRACT, ULTRALOC 5A180, QUINCE 78504

C1 BROADLOOM CARPET, BUILDING STANDARD

CT2 (BATHROOM FLOOR) PORCELAIN TILE: FLORIM, BASALTINE, 12X24. MOSAIC TILE CO.

CEILINGS

AC1 ACCOUSTICAL CEILING TILE: ARMSTRON, 2X2 X 15/16" GRID, ULTIMA 2X2 TILE IN WHITE

PAINTS/COLORS

P1 WALLS/GYP. BD. BULKHEAD: BENJAMIN MOORE; PM-2 (WHITE); REGAL AQUA PEARL

P2 DOORS AND FRAMES: BENJAMIN MOORE; 1599 (MARINA GRAY); SEMI-GLOSS

P3 ACCENT WALL PAINT: BENJAMIN MOORE; 1624 (WESTCOTT NAVY); REGAL AQUA PEARL FINISH AND SHERWIN WILLIAMS; DRY ERASE COATING; 6504-27370

MILLWORK

PLAM1 LAMINATE (MILLWORK): WILSONART SOLICOR; COLOR: D354-01 (DESIGNER WHITE); HIGH GLOSS

PLAM2 LAMINATE (TOE-KICK): WILSONART SOLICOR; COLOR: 1595-60 (BLACK); MATTE

PLAM 3 LAMINATE (MILLWORK COUNTERS):TBD

MISC

SS1 SOLID SURFACE COUNTER TOP, tbd

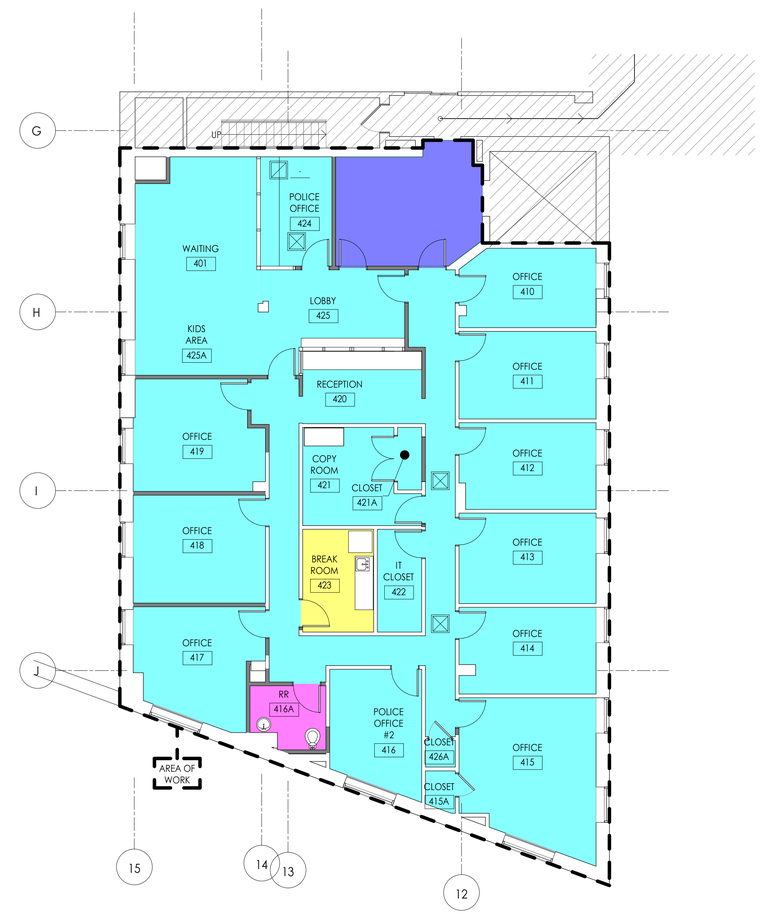

1 WORKING PLAN - LEVEL 4 - FINISH PLAN

SCALE: 1/8" = 1'-0"

RITTER-NORTON ARCHITECTS
Professional Limited Liability Company

814 King Street, 3rd Floor
Alexandria, Virginia 22314
703.548.4405 t.
703.548.4910 f.
www.ritternorton.com

DC COURTS INTERIOR ALTERATION
2041 MARTIN LUTHER KING BLVD.SE
SUITE 400
WASHINGTON DC 20020

REVISIONS

95% CHECK SET

03.10.2020

FINISH PLAN AND FINISH SCHEDULE

A602

GENERAL NOTES

1. SCOPE: FURNISH ALL LABOR, MATERIALS, TOOLS, EQUIPMENT, SERVICES AND SKILLED SUPERVISION NECESSARY TO PROVIDE, INSTALL, TEST AND ADJUST HVAC SYSTEMS COMPLETE, OPERATIONAL, AND READY FOR USE, AS INDICATED IN THESE DRAWINGS AND SPECIFICATIONS.

2. PERMITS, LICENSES & FEES: PAY ALL REQUIRED FEES AND OBTAIN ALL NECESSARY PERMITS AND LICENSES FOR LEGAL REMOVAL AND INSTALLATION OF THE WORK.

3. APPLICABLE CODES AND STANDARDS: ALL WORK SHALL BE PERFORMED IN ACCORDANCE WITH THE FOLLOWING CODES AND STANDARDS AND ANY REGULATIONS EFFECTIVE IN THE PROJECT JURISDICTION. ALL CODE CONFLICTS SHALL BE BROUGHT TO THE ATTENTION OF THE OWNER FOR RESOLUTION. APPLICABLE CODES AND STANDARDS ON THIS PROJECT INCLUDE, BUT ARE NOT LIMITED TO, THE FOLLOWING:

   A. INTERNATIONAL BUILDING CODE 2012
   B. INTERNATIONAL MECHANICAL CODE 2012
   C. INTERNATIONAL PLUMBING CODE 2012
   D. INTERNATIONAL ENERGY CONSERVATION CODE 2012
   E. NFPA 70, NATIONAL ELECTRICAL CODE
   F. NFPA 101, LIFE SAFETY CODE
   G. DISTRICT OF COLUMBIA BUILDING CODE SUPPLEMENT OF 2013

4. DRAWING ACCURACY: LOCATIONS AND SIZES OF EXISTING EQUIPMENT, PIPING, DUCTWORK, OUTLETS, FIXTURES, AND DEVICES SHOWN ON DRAWINGS ARE APPROXIMATE AND SHALL BE VERIFIED AT THE PROJECT SITE. DRAWINGS ARE DIAGRAMMATIC AND NOT INTENDED TO BE SCALED. WHEN INDICATED, ALL WORK SHALL BE PHYSICALLY LOCATED IN ACCORDANCE WITH ANNOTATED DIMENSIONS ON ARCHITECTURAL PLANS, ELEVATIONS AND DETAILS.

5. SITE VISIT: THE CONTRACTOR SHALL VISIT THE SITE AND SHALL FAMILIARIZE HIMSELF WITH THE EXISTING CONDITIONS, EQUIPMENT, DUCTWORK, PIPING, WIRING, CONSTRUCTION, FINISHES, AND STRUCTURE PRIOR TO START OF WORK. WHEN ANY DISCREPANCY OR CONFLICT IS DETECTED AT THE PROJECT SITE, THE OWNER SHALL BE NOTIFIED IMMEDIATELY PRIOR TO COMMENCING WORK.

6. COORDINATION: CONTRACTOR SHALL COORDINATE AND SEQUENCE THE WORK OF ALL DIVISIONS AND TRADES PRIOR TO FABRICATION AND INSTALLATION OF DUCTWORK AND RACEWAYS. COORDINATE THE LOCATION OF ALL NEW EQUIPMENT, DUCTWORK, AND DEVICES WITH NEW STRUCTURE AND EQUIPMENT BEFORE FABRICATION. MAKE NECESSARY ACCOMMODATIONS TO MEET THE INTENT OF THE DRAWINGS AND ENSURE A COORDINATED INSTALLATION.

7. COORDINATED SHOP DRAWINGS: THE CONTRACTOR SHALL PROVIDE COORDINATED INSTALLATION SHOP DRAWINGS, INCLUDING SECTIONS AND ELEVATIONS, WITH MINIMUM SCALE OF 3/8"=1'-0", FOR ALL MECHANICAL ROOMS, ELECTRICAL ROOMS AND CLOSETS, COMMUNICATIONS ROOMS AND CLOSETS, PIPING AND DUCT SHAFTS, AND OTHER CEILING SPACES, WALLS, RAISED FLOORS, OR CHASES WHERE THE WORK OF DIFFERENT TRADES ARE IN CLOSE PROXIMITY OR SPACE CONDITIONS ARE LIMITED. DRAWINGS SHALL SHOW DUCTWORK, PLUMBING PIPING, SPRINKLER PIPING, CABLE TRAYS, PULL BOXES, CONDUITS, LIGHT FIXTURES, SUSPENDED CEILINGS, AND STRUCTURAL ELEMENTS WITHIN THE SPACE DESIGNATED FOR MECHANICAL AND ELECTRICAL WORK. SHOP DRAWINGS SHALL BE SUBMITTED PRIOR TO STARTING INSTALLATION IN ACCORDANCE WITH SECTION 1 OF THE SPECIFICATIONS. SHOP DRAWINGS SHALL BE APPROVED PRIOR TO STARTING INSTALLATION.

8. MATERIALS: MANUFACTURERS AND CATALOG NUMBERS ARE USED HERE STRICTLY AS A REFERENCE, THEY REPRESENT THE TYPE, SIZE, CONSTRUCTION, PERFORMANCE, AND LEVEL OF QUALITY DESIRED. EQUIPMENT FROM OTHER MANUFACTURERS THAT MATCH OR SURPASS THE CHARACTERISTICS OF THOSE REFERENCED WILL BE ACCEPTABLE SUBJECT TO APPROVAL BY THE OWNER.

9. SUBMITTALS AND SUBSTITUTIONS: CONTRACTOR SHALL PROVIDE PRODUCT INFORMATION, SHOP DRAWINGS, DOCUMENTS AND WARRANTIES FOR MATERIALS AND SERVICES TO THE OWNER FOR APPROVAL. NO SUBSTITUTION WILL BE ALLOWED WITHOUT PERMISSION OF THE OWNER IN WRITING. SUBSTITUTE MATERIAL SHALL BE COMPATIBLE WITH OTHER COMPONENTS OF THE SYSTEM.

10. INSTALLATION OF NEW WORK: INSTALLATION OF EQUIPMENT, DUCTWORK, PIPING, FIXTURES, ETC. SHALL BE DONE IN NEAT AND WORKMANLIKE MANNER, AND SHALL CONFORM TO THE LATEST TRADE PRACTICES. REFER TO ARCHITECTURAL DRAWINGS TO VERIFY EXACT LOCATION OF EQUIPMENT, FIXTURES, ETC. COORDINATE DUCTWORK AND PIPING WITH THE WORK OF OTHER TRADES PRIOR TO FABRICATION. MAKE NECESSARY ACCOMMODATIONS TO MEET THE INTENT OF THE DRAWINGS AND ENSURE A COORDINATED INSTALLATION.

11. DRAWINGS ARE DIAGRAMMATIC AND REPRESENT THE INTENT OF THE PLANS AND SPECIFICATIONS. MANUFACTURER AND CATALOG NUMBERS ARE USED HERE STRICTLY AS REFERENCE. THEY REPRESENT THE TYPE, SIZE, CONSTRUCTION, PERFORMANCE AND LEVEL OF QUALITY DESIRED. EQUIPMENT AND APPURTENANCES FROM OTHER MANUFACTURERS THAT MATCH OR SURPASS THE CHARACTERISTICS OF THOSE REFERENCED AND THAT WILL FIT IN THE ALLOCATED SPACE WILL BE ACCEPTABLE, SUBJECT TO APPROVAL BY THE OWNER'S REPRESENTATIVE.

12. MOUNTING HEIGHTS: COORDINATE MOUNTING HEIGHTS OF DEVICES ON FINISHED WALLS TO PROVIDE A NEAT AND SYMMETRICAL APPEARANCE. SEE ARCHITECTURAL PLANS, ELEVATIONS AND DETAILS FOR HEIGHTS AND LOCATIONS OF EQUIPMENT. DIMENSIONS, UNLESS OTHERWISE NOTED, ARE TO CENTERLINE OF EQUIPMENT.

13. WARNING SIGNS: PROVIDE SIGNS, BARRICADES, GUARDS, AND PROTECTION FOR SAFETY DURING CONSTRUCTION. WORK AREA SHALL BE KEPT CLEAN, CLEAR OF OBSTRUCTIONS, WELL ILLUMINATED, AND UNDER ORGANIZED MATERIAL STORAGE.

14. FIRE STOPPING: REFER TO ARCHITECTURAL PLANS FOR DETAILS AND REQUIREMENTS FOR CONDUIT AND PIPING PENETRATIONS THROUGH WALLS, FLOORS AND CEILINGS.

15. REPAIR: ALL WORK SHALL BE DONE IN SUCH A MANNER TO MINIMIZE DAMAGE TO ADJACENT EQUIPMENT, PIPING, DUCTWORK, WIRING, FIXTURES, CONSTRUCTION, FINISHES AND STRUCTURE. ANY DAMAGE RESULTING FROM WORK UNDER THIS PROJECT SHALL BE REPAIRED OR REPLACED BY THE CONTRACTOR TO THE SATISFACTION OF THE OWNER AT NO ADDITIONAL COST.

GENERAL NOTES

16. CLEANING & MATERIAL DISPOSITION: CLEAR ALL DEBRIS FROM THE AREA OF WORK AND LEAVE SITE IN CLEAN CONDITION. CLEAN ALL EQUIPMENT ENCLOSURES, INSIDE AND OUTSIDE.

17. CUTTING & PATCHING: PERFORM CUTTING AND PATCHING NECESSARY FOR INSTALLATION OF THIS WORK. SEAL UNUSED PENETRATIONS RESULTING FROM DEMOLITION FOR THIS WORK. RESTORE SURFACES TO ADJACENT FINISH AND CONDITION.

18. UNKNOWN WIRING, PIPING AND DUCTWORK: DO NOT DISTURB ANY WIRING, PIPING, OR DUCTWORK WHOSE ORIGIN, FUNCTION AND UTILITY ARE UNKNOWN WITHOUT PRIOR APPROVAL FROM THE OWNER. FIELD VERIFY ALL WIRING, PLUMBING, AND DUCTWORK IN WORK AREAS PRIOR TO START OF WORK.

19. PROVIDE INSULATION AS FOLLOWS:
   - AIR CONDITIONING DUCTS: INSULATE ALL SUPPLY AND RETURN (OMIT FOR PLENUM RETURN) DUCTS WITH 1-1/2" THICK, 1.5 PCF DENSITY FIBERGLASS, FLEXIBLE BLANKET INSULATION FACED WITH A FIRE RESISTIVE VAPOR BARRIER JACKET
   - CONDENSATE DRAIN PIPING: INSULATE WITH 1/2" THICK ARMAFLEX FIRE RATED INSULATION OR APPROVED EQUAL, ALL JOINTS SHALL BE SEALED WITH ARMAFLEX JOINTS.
   - REFRIGERANT PIPING: INSULATE TO A MINIMUM OF R-3 WITH 1" THICK ARMAFLEX INSULATION OR APPROVED EQUAL. PROVIDE UV RESISTANT ARMAFLEX WB WEATHER PROTECTION OR SIMILAR COATING FOR ALL OUTDOOR REFRIGERANT PIPING.

20. TESTING AND BALANCING: SYSTEM SHALL BE BALANCED TO DELIVER AIR QUANTITIES INDICATED ON THE DRAWINGS. WORK SHALL BE PERFORMED BY FIRM(S) CERTIFIED BY THE NATIONAL ENVIRONMENTAL BALANCING BUREAU. MECHANICAL CONTRACTOR SHALL PROVIDE ALL NECESSARY VOLUME DAMPERS TO ACHIEVE AIR QUANTITIES INDICATED ON DRAWINGS. ADJUST RETURN AIR DAMPERS AS REQUIRED DURING BALANCE PROCEDURES. BALANCING OF THE SYSTEM SHALL BE PERFORMED PRIOR TO CEILING AND CONCEALMENT OF HVAC COMPONENTS. CORRECT ALL DEFICIENCIES AT THAT TIME.

21. DUCT LEAKAGE TEST: A DUCT LEAKAGE TEST IS REQUIRED TO BE SUBMITTED AT FINAL INSPECTION. THE TEST REPORT SHALL BE SIGNED BY THE PARTY CONDUCTING THE TEST AND PROVIDED TO CODE OFFICIAL UPON REQUEST. THE DUCT LEAKAGE TEST AND CORRESPONDING REPORT SHALL DEMONSTRATE THE FOLLOWING:
   A. DUCT AIR LEAKAGE-TO-OUTSIDE RATE LESS THAN 4 CFM PER 100 SQUARE FEET OF CONDITIONED FLOOR AREA WHEN TESTED AT A PRESSURE DIFFERENTIAL OF 0.1 INCHES W.G.
   B. TOTAL DUCT AIR LEAKAGE RATE LESS THAN 8 CFM PER 100 SQUARE FEET OF CONDITIONED FLOOR AREA WHEN TESTED AT A PRESSURE DIFFERENTIAL OF 0.1 INCHES W.G.

22. DUCT SEAL SHALL MEET THE REQUIREMENTS OF UL-181, UL-181A AND UL-181B.

23. MOTORIZED DAMPER LEAKAGE RATES SHALL BE IN ACCORDANCE WITH IECC 402.4.5.2.
   A. ALL DAMPERS 24" OR LARGER IN EITHER DIMENSION SHALL BE PROVIDED WITH CLASS IA MOTORIZED DAMPERS, MAXIMUM LEAKAGE RATE OF 4 CFM/S.F.
   B. ALL OTHER DAMPERS ARE PERMITTED TO BE CLASS III DAMPERS, MAXIMUM LEAKAGE RATE OF 40 CFM/S.F.

24. PROVIDE BUILDING OWNER WITH O&M MANUALS AND AS-BUILTS WITHIN 30 DAYS AFTER DATE OF SYSTEM ACCEPTANCE.

23. FLEXIBLE DUCT: PROVIDE INSULATED U.L. LISTED CLASS 1 DUCT COMPLYING WITH NFPA 90A. CONNECT SUPPLY DIFFUSER TO THE SUPPLY DUCT VIA FLEX DUCT. THE MAXIMUM ALLOWABLE LENGTH OF FLEXIBLE DUCT SHALL BE 6 FEET.

24. ALL DUCT AND PLENUM SIZES SHOWN ARE CLEAR INSIDE DIMENSIONS.

25. DUCTWORK:
   A. NFPA COMPLIANCE:
   B. NFPA 90A, "INSTALLATION OF AIR CONDITIONING AND VENTILATING SYSTEMS".
   C. NFPA 90B, "INSTALLATION OF WARM AIR HEATING AND AIR CONDITIONING SYSTEMS".
   D. COMPLY WITH SMACNA'S "HVAC DUCT CONSTRUCTION STANDARDS METAL AND FLEXIBLE" FOR ACCEPTABLE MATERIALS, MATERIAL THICKNESSES, AND DUCT CONSTRUCTION METHODS, UNLESS OTHERWISE INDICATED. SHEET METAL MATERIALS SHALL BE FREE OF PITTING, SEAM MARKS, ROLLER MARKS, STAINS, DISCOLORATIONS, AND OTHER IMPERFECTIONS.
   E. GALVANIZED SHEET STEEL: LOCK-FORMING QUALITY; COMPLYING WITH ASTM A 653/A 653M AND HAVING G90 COATING DESIGNATION; DUCTS SHALL HAVE MILL-PHOSPHATIZED FINISH FOR SURFACES EXPOSED TO VIEW.
   F. REINFORCEMENT SHAPES AND PLATES: GALVANIZED-STEEL
   G. REINFORCEMENT WHERE INSTALLED ON GALVANIZED SHEET METAL DUCTS.
   H. TIE RODS: GALVANIZED STEEL, 1/4-INCH MINIMUM DIAMETER FOR LENGTHS 36 INCHES OR LESS; 3/8-INCH MINIMUM DIAMETER FOR LENGTHS LONGER THAN 36 INCHES.
   I. JOINT AND SEAM TAPE: 2 INCHES WIDE; GLASS-FIBER- REINFORCED FABRIC.
   J. WATER-BASED JOINT AND SEAM SEALANT: FLEXIBLE, ADHESIVE SEALANT, RESISTANT TO UV LIGHT WHEN CURED, UL 723 LISTED, AND COMPLYING WITH NFPA REQUIREMENTS FOR CLASS 1 DUCTS.
   K. CONSTRUCT DUCTS ACCORDING TO THE FOLLOWING:
      SUPPLY DUCTS (AFTER AIR TERMINAL UNITS): 2-INCH WG.
      SUPPLY DUCTS (BEFORE AIR TERMINAL UNITS): 3-INCH WG.
      RETURN DUCTS (NEGATIVE PRESSURE): 1-INCH WG.
      EXHAUST DUCT (NEGATIVE PRESSURE): 1-INCH WG.

26. TESTING AND BALANCING: SYSTEM SHALL BE BALANCED TO DELIVER AIR QUANTITIES INDICATED ON THE DRAWINGS. WORK SHALL BE PERFORMED BY FIRM(S) CERTIFIED BY THE NATIONAL ENVIRONMENTAL BALANCING BUREAU. MECHANICAL CONTRACTOR SHALL PROVIDE ALL NECESSARY VOLUME DAMPERS TO ACHIEVE AIR QUANTITIES INDICATED ON DRAWINGS. ADJUST RETURN AIR DAMPERS AS REQUIRED DURING BALANCE PROCEDURES. BALANCING OF THE SYSTEM SHALL BE PERFORMED PRIOR TO CEILING AND CONCEALMENT OF HVAC COMPONENTS. CORRECT ALL DEFICIENCIES AT THAT TIME. FINAL BALANCE AND REPORT PRIOR TO TENANT OCCUPANCY AND ALL BUILDING COMPONENTS (CEILINGS, DOORS, LIGHT FIXTURES, ETC.) IN PLACE.

ABBREVIATIONS

BTUH	BRITISH THERMAL UNITS PER HOUR
CD	CEILING DIFFUSER
CFM	CUBIC FEET PER MINUTE
DB	DRY BULB
DIA, ø	DIAMETER
EAT	ENTERING AIR TEMPERATURE
EF	EXHAUST FAN
EG	EXHAUST GRILLE
ESP	EXTERNAL STATIC PRESSURE
°F	DEGREES FAHRENHEIT
FLA	FULL LOAD AMPERES
HP	HORSEPOWER
HZ	HERTZ (CYCLES PER SECOND)
IN WG	INCHES WATER GAUGE
LAT	LEAVING AIR TEMPERATURE
MBH	1000 BRITISH THERMAL UNITS PER HOUR
MD	MOTORIZED DAMPER
NTS	NOT TO SCALE
OA	OUTSIDE AIR
OAU	OUTSIDE AIR UNIT
PH	PHASE
RG	RETURN GRILLE
RH	RELATIVE HUMIDITY
SEER	SEASONAL ENERGY EFFICIENCY RATIO

DRAWING LIST

M001	GENERAL NOTES, SYMBOLS, & ABBREVIATIONS
M101	4TH FLOOR DEMOLITION PLAN
M102	EXISTING PARTIAL ROOF PLAN
M201	4TH FLOOR NEW WORK PLAN
M501	DETAILS
M701	SCHEDULES & CONTROLS

SYMBOLS

	NEW WORK
T	THERMOSTAT 60" A.F.F. (48" ADA) UNLESS OTHERWISE NOTED (ARROW INDICATES UNIT CONTROLLED)
C	CARBON MONOXIDE SENSOR
	SUPPLY AIR DUCT/AIR DEVICE
	RETURN AIR DUCT/AIR DEVICE
	MANUAL AIR VOLUME DAMPER
M	MOTORIZED DAMPER
BD	BACKDRAFT DAMPER
SD	DUCT-MOUNTED SMOKE DETECTOR
FD	FIRE-DAMPER
12x8	DUCT SIZE, INCHES FIRST FIGURE IS SIDE SHOWN
6"ø	ROUND DUCT SIZE, INCHES
R	CHANGE OF ELEVATION (R)RISE (D)DROP
	SUPPLY DUCT TURNED DOWN
	SUPPLY DUCT TURNED UP
	RETURN DUCT TURNED DOWN
12x8	DUCT WITH SOUNDLINER, SIZES INDICATED INNER CLEAR DIMENSION.
	RETURN DUCT TURNED UP
	CEILING GRILLE OR CEILING REGISTER WITH VOLUME DAMPER
	OPEN END DUCT WITH WIRE MESH SCREEN
	DUCT BRANCH CONNECTION WITH VOLUME DAMPER (RECT. x RECT)
	DUCT BRANCH CONNECTION WITH VOLUME DAMPER AND FLEXIBLE DUCT CONNECTED TO SUPPLY DIFFUSER
	TRANSITION
	SQUARE TO ROUND TRANSITION
	ELBOW WITH TURNING VANES
X	KEY NOTE NUMBER DESIGNATION
	EQUIPMENT TAG CAPACITY
REF	REFRIGERANT LINE SET (LIQUID AND SUCTION)
	EXHAUST FAN

RITTER-NORTON ARCHITECTS
Professional Limited Liability Company
814 King Street, 3rd Floor
Alexandria, Virginia 22314
703.548.4405 t.
703.548.4910 f.
www.ritternorton.com

BUILT ENVIRONMENT ENGINEERS
5520 WILSON BLVD, STE 201
ARLINGTON, VA 22205
703.840.9585 WWW.BEENGINEERS.COM

DC COURTS
INTERIOR ALTERATION
2041 MARTIN LUTHER KING BLVD.SE
SUITE 400
WASHINGTON DC 20020

2019-46
PROJECT NUMBER

REVISIONS
-
3.10.2020

GENERAL NOTES, SYMBOLS, & ABBREVIATIONS

M001

REVIEW SET
03/05/2020

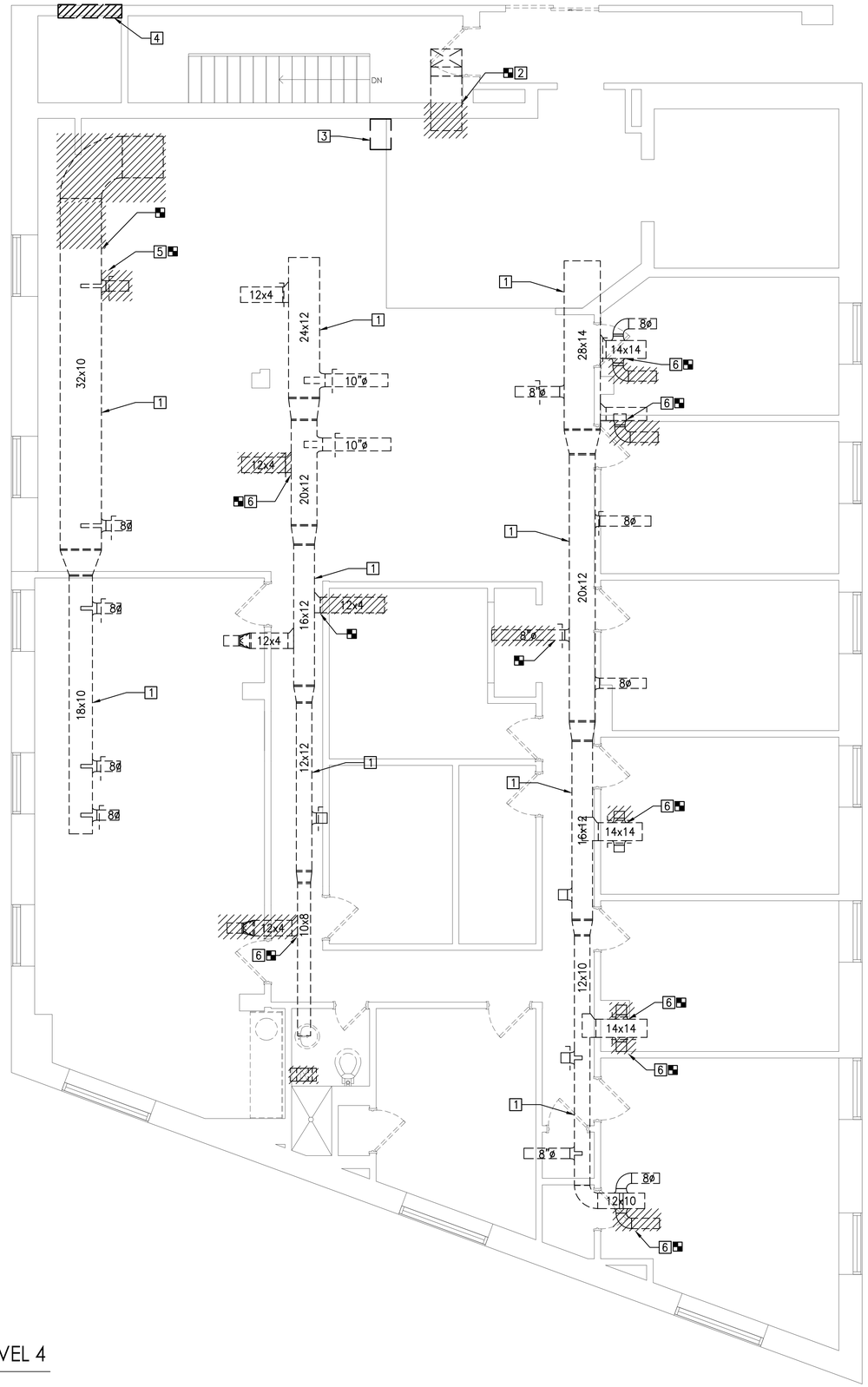

1 DEMOLITION PLAN - LEVEL 4

SCALE: 1/4" = 1'-0"

GENERAL NOTES:

A. ----

KEYED NOTES:

1. EXISTING DUCTWORK TO REMAIN.
2. DEMOLISH DUCTWORK BACK TO WALL. CAP AND REPAIR OPENING IN WALL.
3. EXISTING REFRIGERANT PIPING UP/DN TO OTHER FLOORS TO REMAIN.
4. EXISTING LOUVER TO REMAIN.
5. DEMOLISH DUCTWORK BACK TO MAIN DUCT. CAP OPENING IN DUCT.
6. DEMOLISH DUCTWORK BACK TO MAIN DUCT.

REVIEW SET
03/05/2020

RITTER·NORTON
ARCHITECTS
Professional Limited Liability Company
814 King Street, 3rd Floor
Alexandria, Virginia 22314
703.548.4405 t.
703.548.4910 f.
www.ritternorton.com

BUILT ENVIRONMENT ENGINEERS
5200 WILSON BOULEVARD
ARLINGTON, VA 22205
703.840.9585 WWW.BENGINEER.COM

DC COURTS
INTERIOR ALTERATION
2041 MARTIN LUTHER KING BLVD.SE
SUITE 400
WASHINGTON DC 20020

2019-46
PROJECT NUMBER

REVISIONS
3.10.2020

4TH FLOOR
DEMOLITION
PLAN

M101

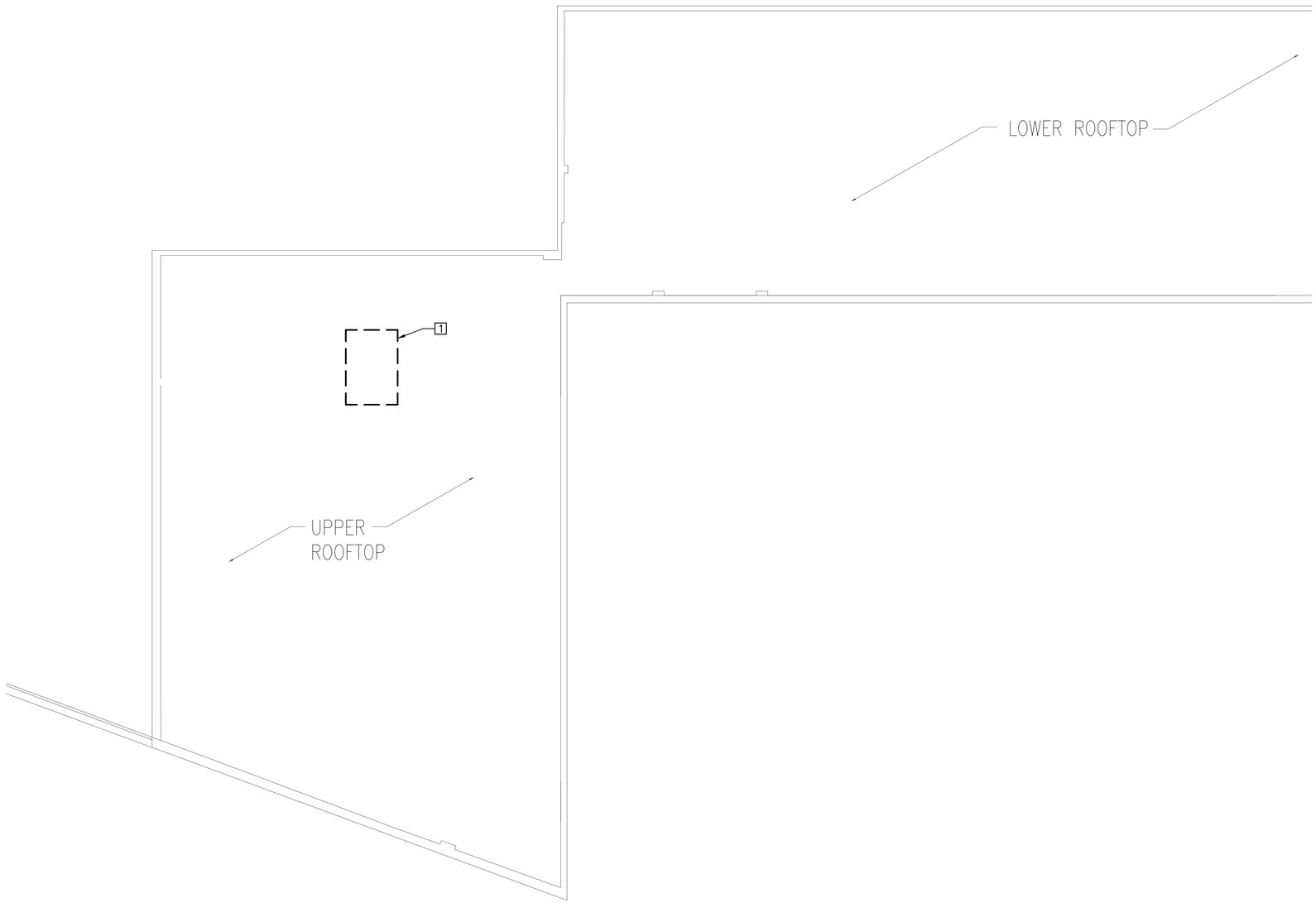

1 EXISTING PLAN - PARTIAL ROOF

SCALE: 1/8" = 1'-0"

GENERAL NOTES:

A. ----

KEYED NOTES:

1. EXISTING ROOFTOP UNIT TO REMAIN.

REVIEW SET
03/05/2020

RITTER·NORTON
ARCHITECTS
Professional Limited Liability Company

814 King Street, 3rd Floor
Alexandria, Virginia 22314
703.548.4405 t.
703.548.4910 f.
www.ritternorton.com

BUILT ENVIRONMENT ENGINEERS
5520 WILSON BOULEVARD
ARLINGTON, VA 22205
703.840.0666 WWW.BEENGRS.COM

DC COURTS
INTERIOR ALTERATION

2041 MARTIN LUTHER KING BLVD.SE
SUITE 400
WASHINGTON DC 20020

2019-46
PROJECT NUMBER

REVISIONS
-
3.10.2020

EXISTING
PARTIAL ROOF
PLAN

M102

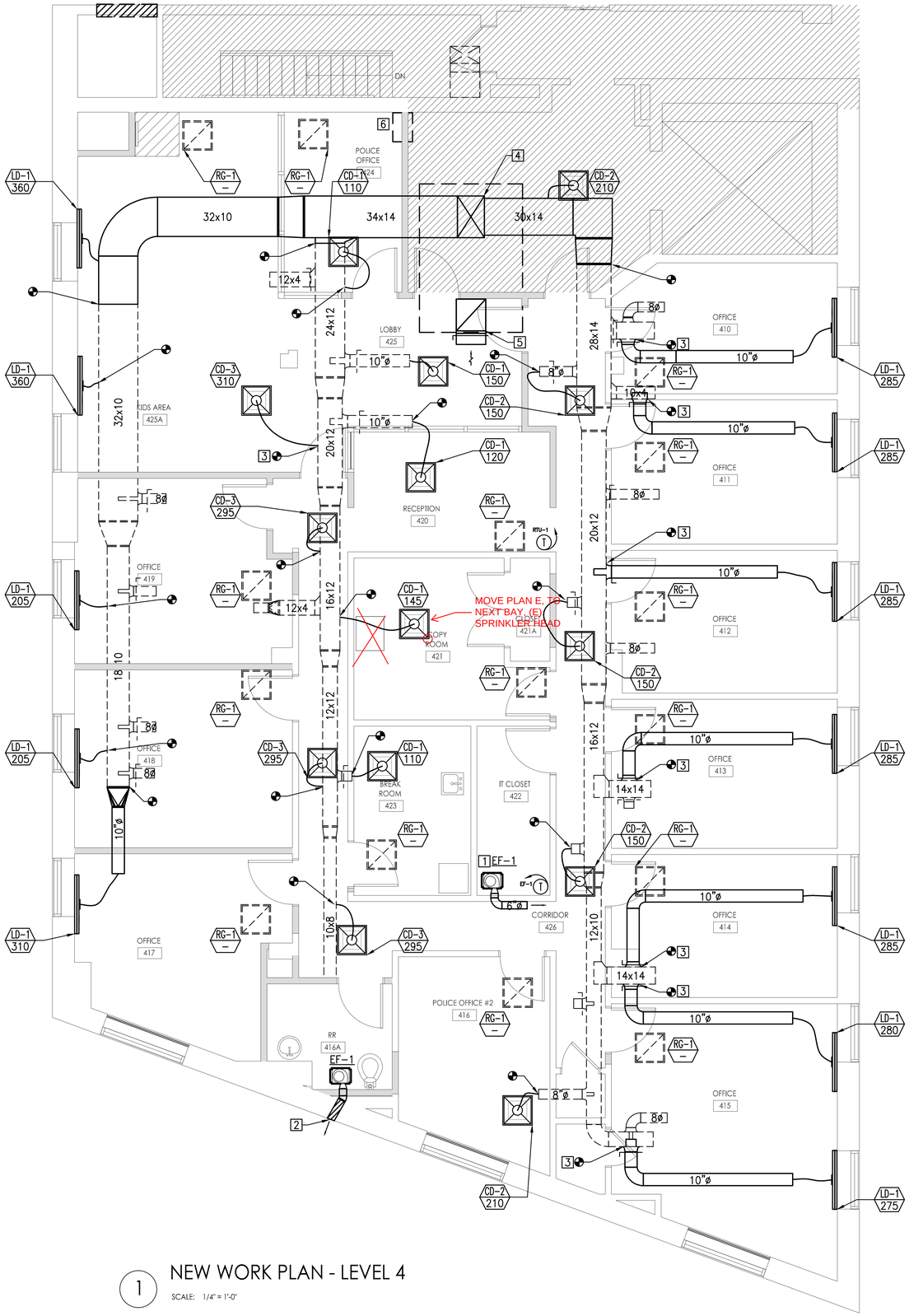

1 NEW WORK PLAN - LEVEL 4

SCALE: 1/4" = 1'-0"

GENERAL NOTES:

A. ----

KEYED NOTES:

1. DISCHARGE EXHAUST AIR TO CEILING PLENUM.
2. PROVIDE 0.1 SF MINIMUM FREE AREA EXHAUST LOUVER.
3. PROVIDE NEW VOLUME DAMPER.
4. 34"x22" SUPPLY AIR DUCT UP TO RTU.
5. 24"x26" RETURN AIR DUCT UP TO RTU. PROVIDE WIRE MESH SCREEN AT OPENING TO CEILING PLENUM.
6. ARCHITECT TO ENCLOSE EXPOSED REFRIGERANT PIPING.

RITTER·NORTON
ARCHITECTS
Professional Limited Liability Company
814 King Street, 3rd Floor
Alexandria, Virginia 22314
703.548.4405 t.
703.548.4910 f.
www.ritternorton.com

BUILT ENVIRONMENT ENGINEERS
5520 WILSON BLVD, STE 200
ARLINGTON, VA 22205
703.840.0345 WWW.BENGINEER.COM

DC COURTS INTERIOR ALTERATION

2041 MARTIN LUTHER KING BLVD.SE
SUITE 400
WASHINGTON DC 20020

2019-46
PROJECT NUMBER

REVISIONS
-
3.10.2020

4TH FLOOR
NEW WORK
PLAN

M201

REVIEW SET
03/05/2020

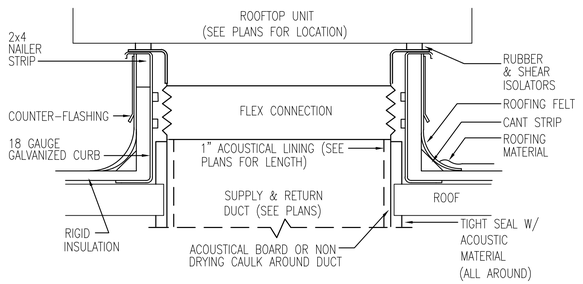

NOTE:
1. LINE ROOF UNDER CURB AND SIDES OF CURB WITH 4" THICK (TWO 2" LAYERS) ACOUSTICAL BOARD.

1 ROOFTOP UNIT MOUNTING WITH CURB DETAIL
SCALE: NOT TO SCALE

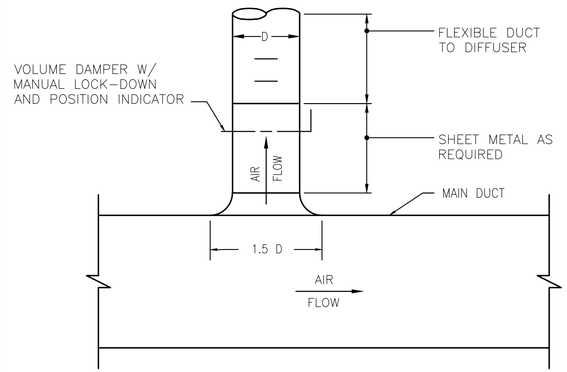

2 CIRCULAR DUCT TAP WITH VOLUME DAMPER DETAIL
SCALE: NOT TO SCALE

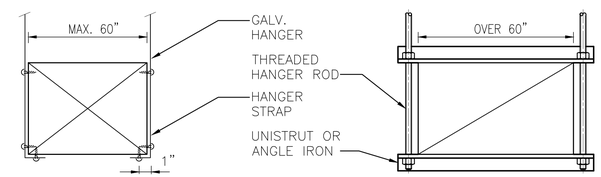

NOTES:
1. ON DUCTS OVER 60" WIDE, BOTTOM SHALL BE BRACED BY ANGLE. FOR CROSS SECTION AREA MORE THAN 8 SQ FT. DUCT SHALL BE BRACED BY ANGLES ON ALL FOUR SIDES.
2. CUTTING AND PATCHING SHALL BE LIMITED TO A MINIMUM AS REQUIRED FOR PROPER INSTALLATION.
3. SUPPORTS SHALL BE SPACED AND SIZED AS PER SMACNA.

3 DUCT HANGER SUPPORT DETAIL
SCALE: NOT TO SCALE

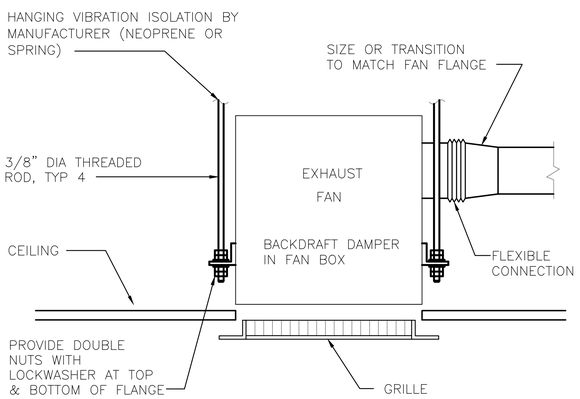

4 CEILING EXHAUST FAN DETAIL
SCALE: NOT TO SCALE

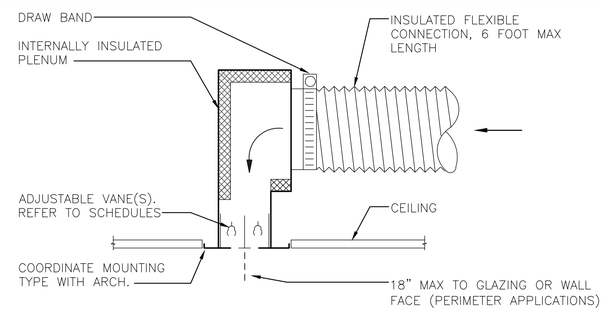

NOTES:
1. OFFSETS WITH FLEX DUCT SHALL NOT EXCEED 30° AND SHALL BE GRADUAL. OFFSETS IN EXCESS OF 30° SHALL BE HARD DUCTED.
2. FLEX DUCT SHALL NOT HAVE MORE THAN 1/2" SAG/FT.
3. FOR PERIMETER DIFFUSERS LOCATE DISTANCE FROM OUTSIDE WALL SHOWN ON ARCH PLANS.
4. CONNECTION TO MAIN DUCT SHALL BE HARD DUCT TRANSITION AND VOLUME DAMPER.

5 LINEAR SLOT DIFFUSER DETAIL
SCALE: NOT TO SCALE

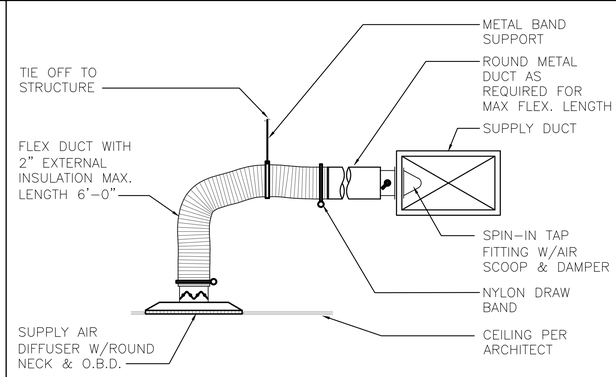

NOTES:
1. CONTRACTOR SHALL PROVIDE ACCESS PANELS/REMOTE DAMPER ACTUATORS IN HARD CEILING OR LIMITED ACCESS INSTALLATIONS.
2. COORDINATE ACCESS PANELS WITH ARCHITECT PRIOR TO INSTALLATION.

6 SUPPLY AIR DIFFUSER DETAIL
SCALE: NOT TO SCALE

RITTER·NORTON
ARCHITECTS
Professional Limited Liability Company
814 King Street, 3rd Floor
Alexandria, Virginia 22314
703.548.4405 t.
703.548.4910 f.
www.ritternorton.com

BUILT
ENVIRONMENT
ENGINEERS
5520 WILSON BLVD, STE 200
ARLINGTON, VA 22205
703.845.9300 WWW.BEINGENS.COM

DC COURTS
INTERIOR ALTERATION
2041 MARTIN LUTHER KING BLVD.SE
SUITE 400
WASHINGTON DC 20020

2019-46
PROJECT NUMBER

REVISIONS
3.10.2020

DETAILS

REVIEW SET
03/05/2020

M501

EXISTING ROOF TOP UNIT SCHEDULE

TAG	SUPPLY FAN				COOLING MODE							HEATING MODE					POWER (V/PH/HZ)	MCA	MOP	FLA	WEIGHT (LBS)	BASIS OF DESIGN (AMERICAN STANDAR)
	SA FLOW (CFM)	OA FLOW (CFM)	ESP (IN WG)	FAN BHP	EADB (˚F)	EAWB (˚F)	TOTAL CAP. (MBH)	SEN CAP. (MBH)	EER	LADB (˚F)	LAWB (˚F)	HEAT TYPE	MIN. CAP (MBH)	INPUT (MBH)	EA DB (˚F)	LA DB (˚F)						
RTU-1	6000	1000	0.7	2.3	77	65.5	154.6	106.9	12.0	61.0	57.5	STEAM	194.4	–	65.1	95	208/3/60	–	–	–	–	WSD180E3 R0B0000

NOTES:
1. PROVIDE WITH FIELD INSTALLED MOTORIZED OUTSIDE AIR DAMPER.
2. PROVIDE WITH FIELD INSTALLED RELIEF AIR DAMPER.
3. PROVIDE WITH INTEGRAL SMOKE DAMPER.

MECHANICAL VENTILATION SCHEDULE

DESIGN CONDITIONS					IMC 2012 VENTILATION RATE PROCEDURE							DELIVERED OUTDOOR AIR (CFM)
ZONE	SPACE NUMBER	SPACE NAME	OCCUPANCY CATEGORY	FLOOR AREA (ft²)	REQUIRED OUTDOOR AIR (CFM/person)	REQUIRED OUTDOOR AIR (CFM/ft²)	OCCUPANT DENSITY (#/1000 ft²)	OCCUPANCY	AIR DISTRIBUTION EFFECTIVENESS	UNCORRECTED OUTDOOR AIR (CFM)	REQUIRED OUTDOOR AIR (CFM)	
RTU-1	425A	KIDS AREA	RECEPTION	453	5	0.06	30	14	0.8	97.2	121	–
	410	OFFICE	OFFICE	128	5	0.06	5	1	0.8	12.7	16	–
	411	OFFICE	OFFICE	154	5	0.06	5	1	0.8	14.2	18	–
	412	OFFICE	OFFICE	146	5	0.06	5	1	0.8	13.8	17	–
	413	OFFICE	OFFICE	155	5	0.06	5	1	0.8	14.3	18	–
	414	OFFICE	OFFICE	147	5	0.06	5	1	0.8	13.8	17	–
	415	OFFICE	OFFICE	243	5	0.06	5	2	0.8	24.6	31	–
	416	POLICE OFFICE #2	OFFICE	134	5	0.06	5	1	0.8	13.0	16	–
	417	OFFICE	OFFICE	166	5	0.06	5	1	0.8	15.0	19	–
	418	OFFICE	OFFICE	143	5	0.06	5	1	0.8	13.6	17	–
	419	OFFICE	OFFICE	151	5	0.06	5	1	0.8	14.1	18	–
	424	POLICE OFFICE	OFFICE	89	5	0.06	5	1	0.8	10.3	13	–
	425	LOBBY	LOBBY	132	7.5	0.06	30	4	0.8	37.9	47	–
	–	ELEVATOR LOBBY	LOBBY	190	7.5	0.06	30	6	0.8	56.4	71	–
	421	COPY ROOM	COPY	123	5	0.06	4	1	0.8	12.4	15	–
	426	CORRIDOR	CORRIDOR	265	–	0.06	–	–	0.8	15.9	20	–
	420	RECEPTION	RECEPTION	97	5	0.06	30	3	0.8	20.8	26	–
	423	BREAK ROOM	BREAK	91	5	0.06	25	3	0.8	20.5	26	–
	ZONE TOTAL			3,007					0.8	420.4	526	1,000

DIFFUSER SCHEDULE

TAG	CFM RANGE	NECK SIZE (INCHES)	NOMINAL FACE SIZE (INCHES)	SLOT SIZE (INCHES)	BASIS OF DESIGN (TITUS)	REMARKS
CD-1	75-150	6 ø	24 x 24	–	OMNI SERIES	1
CD-2	155-285	8 ø	24 x 24	–	OMNI SERIES	1
CD-3	230-380	10 ø	24 x 24	–	OMNI SERIES	1
LD-1	150-360	8 ø	48 LONG	1 ½	FL-15JT	1,2
RG-1	–	24 x 24	–	–	350 SERIES	1

NOTES:
1. COORDINATE FINISH AND MOUNTING WITH ARCHITECT.
2. 1 SLOT LINEAR DIFFUSER.

GENERAL CONTROLS

EF-1:

1. FAN SHALL START AND STOP VIA WALL SWITCH AND SHALL INTERLOCK WITH LIGHTING CONTROL.

EF-2:

1. FAN SHALL ENERGIZE BASED ON INPUT FROM SPACE ZONE SENSOR TO MAINTAIN SETPOINT OF SPACE THERMOSTAT (75°F, ADJUSTABLE).

FAN SCHEDULE

TAG	CFM	E.S.P. (IN WG)	DRIVE	RPM	ELECTRICAL				WEIGHT (LBS)	CONTROL	BASIS OF DESIGN (GREENHECK)	REMARKS
					POWER	VOLTS	PH	HZ				
EF-1	50	0.20	DIRECT	850	14 WATTS	115	1	60	12	WALL SWITCH	SP-A70	1,2
EF-2	70	0.20	DIRECT	900	26 WATTS	115	1	60	12	THERMOSTAT	SP-A90	1

NOTES:
1. PROVIDE DISCONNECT SWITCH.
2. INTERLOCK CONTROLS WITH LIGHTING.

RITTER·NORTON
ARCHITECTS
Professional Limited Liability Company
814 King Street, 3rd Floor
Alexandria, Virginia 22314
703.548.4405 t.
703.548.4910 f.
www.ritternorton.com

BUILT ENVIRONMENT ENGINEERS
5520 WILSON BOULEVARD
ARLINGTON, VA 22205
703.845.9555 WWW.BEENGINEERS.COM

DC COURTS
INTERIOR ALTERATION
2041 MARTIN LUTHER KING BLVD.SE
SUITE 400
WASHINGTON DC 20020

2019-46
PROJECT NUMBER

REVISIONS
3.10.2020

SCHEDULES & CONTROLS

M701

REVIEW SET
03/05/2020

GENERAL NOTES

1. SCOPE: PROVIDE AND INSTALL ALL ELECTRICAL SYSTEMS AS INDICATED AND REQUIRED, COMPLETE AND OPERABLE.

2. FURNISH ALL LABOR, MATERIALS, TOOLS, EQUIPMENT, SERVICES AND SKILLED SUPERVISION NECESSARY FOR THE CONSTRUCTION, RIGGING, ERECTION, INSTALLATION, CONNECTION, TESTING AND ADJUSTMENT OF ALL CIRCUITS AND ELECTRICAL EQUIPMENT SPECIFIED HEREIN OR SHOWN, OR NOTED ON THE DRAWINGS. DELIVER MATERIALS AND EQUIPMENT TO SITE PROTECTED, COMPLETE IN ALL RESPECTS, READY FOR INSTALLATION.

3. APPLICABLE CODES AND STANDARDS: ALL WORK SHALL BE PERFORMED IN ACCORDANCE WITH THE FOLLOWING CODES AND STANDARDS AND ANY REGULATIONS EFFECTIVE IN THE PROJECT JURISDICTION. ALL CODE CONFLICTS SHALL BE BROUGHT TO THE ATTENTION OF THE OWNER FOR RESOLUTION. APPLICABLE CODES AND STANDARDS ON THIS PROJECT INCLUDE, BUT ARE NOT LIMITED TO, THE FOLLOWING:

   A. ICC, INTERNATIONAL BUILDING CODE 2012
   B. ICC, INTERNATIONAL MECHANICAL CODE 2012
   C. ICC, INTERNATIONAL PLUMBING CODE 2012
   D. ICC, INTERNATIONAL ENERGY CONSERVATION CODE, 2012
   E. ICC, INTERNATIONAL GREEN CONSTRUCTION CODE, 2012
   F. NFPA 70, NATIONAL ELECTRICAL CODE
   G. NFPA 101, LIFE SAFETY CODE
   H. DISTRICT OF COLUMBIA BUILDING CODE SUPPLEMENT OF 2013

4. DRAWINGS ARE DIAGRAMMATIC AND REPRESENT THE INTENT OF THE PLANS AND SPECIFICATIONS. MANUFACTURER AND CATALOG NUMBERS ARE USED HERE STRICTLY AS REFERENCE. THEY REPRESENT THE TYPE, SIZE, CONSTRUCTION, PERFORMANCE AND LEVEL OF QUALITY DESIRED. EQUIPMENT AND APPURTENANCES FROM OTHER MANUFACTURERS THAT MATCH OR SURPASS THE CHARACTERISTICS OF THOSE REFERENCED AND THAT WILL FIT IN THE ALLOCATE SPACE WILL BE ACCEPTABLE, SUBJECT TO APPROVAL BY THE OWNER'S REPRESENTATIVE.

5. SITE VISIT: THE CONTRACTOR SHALL VISIT THE SITE AND SHALL FAMILIARIZE HIMSELF WITH THE EXISTING CONDITIONS, EQUIPMENT, WIRING, CONSTRUCTION, FINISHES, AND STRUCTURE PRIOR TO START OF WORK. WHEN ANY DISCREPANCY OR CONFLICT IS DETECTED AT THE PROJECT SITE (SPECIALLY REGARDING THE PANEL CIRCUITRY), THE OWNER SHALL BE NOTIFIED IMMEDIATELY PRIOR TO COMMENCING WORK.

6. CONSULT PLANS AND DETAILS FOR TYPES OF CONSTRUCTION, HEAD ROOM, FINISHES, FURRED CEILINGS, EXACT LOCATION OF FIXTURES, EQUIPMENT AND EXACT DIMENSIONS. OWNER'S REPRESENTATIVE MUST BE NOTIFIED OF ANY VARIATIONS FROM THE DIMENSIONS AND CONDITIONS SHOWN ON THOSE DRAWINGS.

7. COORDINATE MOUNTING HEIGHT OF DEVICES ON FINISHED WALLS TO PROVIDE A NEAT AND SYMMETRICAL APPEARANCE. REFER TO ARCHITECTURAL PLANS, ELEVATIONS AND DETAILS FOR HEIGHTS AND LOCATIONS OF RACEWAYS, DEVICES, AND OTHER ELECTRICAL DEVICES.

8. ALL DEMOLITION, CUTTING AND PATCHING, AND INSTALLATION OF MATERIALS, CONDUITS, WIRING, AND DEVICES SHALL BE DONE IN A PROFESSIONAL MANNER IN ACCORDANCE WITH NECA 1, SHALL CONFORM TO APPLICABLE CODES, REGULATIONS AND MANUFACTURER'S RECOMMENDATIONS, AND SHALL BE COMPLETED IN A MANNER ACCEPTABLE TO THE OWNER'S REPRESENTATIVE. PROVIDE PATCHING SURFACE TO MATCH ADJACENT SURFACE, AND ALSO PAINT COLOR TO MATCH ADJACENT FINISHING COLOR.

9. MATERIALS AND SUBSTITUTIONS: THE CONTRACTOR SHALL SUBMIT A LIST OF ALL MATERIALS AND FIXTURES TO THE OWNER'S REPRESENTATIVE FOR APPROVAL. NO SUBSTITUTION WILL BE ALLOWED WITHOUT PERMISSION IN WRITING.

10. MOUNTING HEIGHTS, UNLESS OTHERWISE NOTED, ARE TO CENTERLINE OF EQUIPMENT.

11. LIGHTING FIXTURES: AS SPECIFIED AND SCHEDULED ON THE DRAWINGS, COMPLETE WITH LAMPS AND ELECTRONIC BALLAST.

12. ALL LIGHT FIXTURES SHALL BE LOCATED AS SHOWN ON THE DRAWING(S), AND SHALL CLEAR ALL DUCTS, EQUIPMENT AND PIPING. LIGHTING FIXTURES SHALL BE INDEPENDENTLY SUPPORTED FROM BUILDING STRUCTURE.

13. CONDUITS: ALL CONDUITS SHALL BE NEW AND SHALL BE CUT TO EXACT LENGTHS TO SUIT THE FIELD CONDITIONS. BURRS SHALL BE REMOVED. PROVIDE BUSHINGS WHERE CONDUIT ENDS ARE EXPOSED TO CABLING.

14. CONDUIT SYSTEMS: CONDUIT SHALL BE EMT (ELECTRIC METALLIC TUBING). ALUMINUM CONDUIT SHALL NOT BE PERMITTED. MINIMUM SIZE OF CONDUIT IS 3/4". RUN CONDUIT PARALLEL TO WALLS AND CEILING. TYPE MC CABLE, 600 VOLT, MAY BE INSTALLED WHERE PERMITTED BY NATIONAL ELECTRICAL CODE (NEC) AND WHERE PROVIDED WITH GROUND WIRE.

GENERAL NOTES CONTINUED

15. OUTLET BOXES: FOUR INCH SQUARE FOR SWITCHES AND RECEPTACLES. AT LOCATIONS WHERE BOXES ARE RECESSED IN DRYWALL, PROVIDE DEVICES WITH RINGS AND PLATES APPROPRIATE TO THE TYPE OF CONSTRUCTION. EXPOSED BOXES LESS THAN 6 FT AFF SHALL NOT HAVE KNOCKOUTS ACCESSIBLE TO OCCUPANTS.

16. PANELBOARDS: MINIMUM SHORT CIRCUIT RATING SHALL BE OF 10,000 RMS SYMMETRICAL AMPERES MINIMUM INTERRUPTING CAPACITY (120/208V). PROVIDE ENCLOSURES WITH CORROSION RESISTANT GALVANIZED (ZINC FINISH) SHEET METAL. DOORS SHALL BE ONE PIECE BOLT ON FRONT WITH LOCKABLE HINGED DOOR OVER THE OVERCURRENT PROTECTION DEVICES. BUS BARS SHALL BE SILVER PLATED COPPER. NEUTRAL SHALL BE FULL SIZE. OVER CURRENT PROTECTION DEVICE SHALL BE MOLDED CASE CIRCUIT BREAKERS FOR BRANCH PANELBOARDS FOR 120/208V PANELS.

17. VERIFY ALL DOOR SWINGS BEFORE INSTALLING LIGHT SWITCHES. INSTALL LIGHT SWITCHES AT LATCH SIDE OF DOORS, HEIGHT PER ADA REQUIREMENTS.

18. TELEPHONE AND DATA OUTLETS: AT LOCATIONS INDICATED, PROVIDE OUTLET BOX AND WITH 1" EMPTY EMT CONDUIT WITH PULL STRING UP TO 6" ABOVE FINISHED CEILING.

19. WIRE AND CABLE: TYPE THWN OR THHN, 600 VOLT, COPPER CONDUCTORS, COLOR CODED. THE MINIMUM SIZE SHALL BE #12 AWG, 75°C TEMPERATURE RATING PER NEC.

20. GROUNDING: ALL SYSTEMS SHALL BE GROUNDED IN ACCORDANCE WITH THE NEC, RECOMMENDED PRACTICES OF IEEE STD 1100, AND ALL LOCAL CODES. CONDUIT OR CABLE ARMOR SHALL NOT BE SOLE MEANS OF GROUNDING FOR ANY CIRCUIT.

21. IDENTIFICATION: PROVIDE EQUIPMENT ENCLOSURES WITH ENGRAVED LAMINATE PLACARDS DISPLAYING EQUIPMENT DESIGNATION AND SOURCE OF POWER. LABEL PULL, JUNCTION & OUTLET BOXES USING INDELIBLE MARKER OR OTHER PERMANENT MEANS INSIDE THE COVER WITH ALL CIRCUIT NUMBERS CONTAINED INSIDE.

22. TESTING: ALL ELECTRICAL WORK SHALL BE TESTED AS REQUIRED BY ALL AUTHORITIES HAVING JURISDICTION, USING NETA STANDARD METHODS AND EQUIPMENT.

23. CLEANING: REMOVE FROM SITE ALL MATERIALS NOT USED IN THIS PROJECT. CLEAR ALL DEBRIS FROM AREA OF WORK AND LEAVE SITE IN CLEAN CONDITION. CLEAN ALL EQUIPMENT ENCLOSURES, INSIDE AND OUTSIDE.

24. PROVIDE FIRESTOPPING FOR ALL CONDUIT PENETRATIONS THROUGH WALLS AND FLOOR SLABS.

25. COORDINATED SHOP DRAWINGS: THE CONTRACTOR SHALL PROVIDE COORDINATED INSTALLATION SHOP DRAWINGS, INCLUDING SECTIONS AND ELEVATIONS, WITH MINIMUM SCALE OF 3/8"=1'-0", FOR ALL MECHANICAL ROOMS, ELECTRICAL ROOMS AND CLOSETS, COMMUNICATIONS ROOMS AND CLOSETS, PIPING AND DUCT SHAFTS, AND OTHER CEILING SPACES, WALLS, RAISED FLOORS, OR CHASES WHERE THE WORK OF DIFFERENT TRADES ARE IN CLOSE PROXIMITY OR SPACE CONDITIONS ARE LIMITED. DRAWINGS SHALL SHOW DUCTWORK, PLUMBING PIPING, SPRINKLER PIPING, CABLE TRAYS, PULL BOXES, CONDUITS, LIGHT FIXTURES, SUSPENDED CEILINGS, AND STRUCTURAL ELEMENTS WITHIN THE SPACE DESIGNATED FOR MECHANICAL AND ELECTRICAL WORK. SHOP DRAWINGS SHALL BE SUBMITTED PRIOR TO STARTING INSTALLATION IN ACCORDANCE WITH DIVISION 1 OF THE SPECIFICATIONS. SHOP DRAWINGS SHALL BE APPROVED PRIOR TO STARTING INSTALLATION.

26. MATERIALS: MANUFACTURERS AND CATALOG NUMBERS ARE USED HERE STRICTLY AS A REFERENCE. THEY REPRESENT THE TYPE, SIZE, CONSTRUCTION, PERFORMANCE, AND LEVEL OF QUALITY DESIRED. EQUIPMENT FROM OTHER MANUFACTURERS THAT MATCH OR SURPASS THE CHARACTERISTICS OF THOSE REFERENCED WILL BE ACCEPTABLE SUBJECT TO APPROVAL BY THE OWNERS REPRESENTATIVE.

27. PROVIDE ACCURATE UPDATED PANELBOARD DIRECTORIES FOR ALL AFFECTED PANELS. INDICATE NEW AND EXISTING CIRCUITS AS WELL AS SPARE CIRCUITS AND BREAKER SPACES. TURN OFF ALL SPARE BREAKERS.

28. NO PIPING, DUCTS, OR EQUIPMENT OF FOREIGN TO ELECTRICAL EQUIPMENT SHALL BE PERMITTED TO BE LOCATED WITHIN TEDICATED SPACE ABOVE THE ELECTRICAL EQUIPMENT.

29. VOICE AND DATA CABLING, EQUIPMENT, AND SPECIFICATIONS SHALL BE PROVIDED BY OTHERS. ELECTRICAL CONTRACTOR SHALL PROVIDE AND COORDINATE RACEWAY, CABLE TRAY, JUNCTION BOX, AND POWER REQUIREMENTS.

30. SECURITY SYSTEM CABLING, EQUIPMENT, AND SPECIFICATIONS SHALL BE PROVIDED BY OTHERS. ELECTRICAL CONTRACTOR SHALL PROVIDE AND COORDINATE RACEWAY, CABLE TRAY, JUNCTION BOX, AND POWER REQUIREMENTS.

31. ALL ELECTRICAL EQUIPMENT SHALL BE UL LISTED FOR ITS INTENDED USE.

LEGEND

7 +44	DUPLEX RECEPTACLE OUTLET: 2P, 3W, 20A, 125V NEMA 5–20R, FLUSH MOUNT, 18" A.F.F. U.O.N. '7' INDICATES CIRCUIT NUMBER; '+44' INDICATES HEIGHT AFF.
AC	GROUND FAULT INTERRUPTER DUPLEX RECEPTACLE OUTLET: 2P, 3W, 20A, 125V NEMA 5–20R, FLUSH MOUNT, 18" A.F.F. U.O.N. '7' INDICATES CIRCUIT NUMBER. AC – ABOVE COUNTER
	DEDICATED RECEPTACLE OUTLET: 2P, 3W, 20A, 125V NEMA 5–20R, FLUSH MOUNT, 18" A.F.F. U.N.O.
	DUPLEX RECEPTACLE OUTLET: 2P, 3W, 20A, 125V NEMA 5–20R, FLUSH MOUNT, WITH ISOLATED GROUND. 18" A.F.F.
	QUADRUPLEX RECEPTACLE OUTLET: 2P, 3W, 20A, 125V NEMA 5–20R, FLUSH MOUNT, 18" A.F.F. U.O.N. '7' INDICATES CIRCUIT NUMBER
WB	RECESSED WALL BOX SHALL ACCOMMODATE DUPLEX OUTLETS, DATA & HDMI LEGRAND EVOLUTION WALL BOX EFS B2 SERIES OR EQUAL
	COMBINATION TELE/DATA OUTLET
$a	WALL MOUNTED TOGGLE SWITCH. LOWER CASE LETTER 'a' INDICATES SWITCH CONTROL
OSa	WALL MOUNTED OCCUPANCY SENSOR WITH OVERRIDE SWITCH SUBSCRIPT 'a' DENOTES SWITCH CONTROL LEVITON IPP15–1LT OR EQUAL
Da	DIMMER SWITCH; 20A, 2 POLE, 120/277V LOWER CASE LETTER 'a' INDICATES SWITCH CONTROL LEVITON OR EQUAL
OSa DL	CEILING MOUNTED PIR OCCUPANCY SENSOR WITH OVERRIDE SWITCH SUBSCRIPT 'a' DENOTES SWITCH CONTROL LEVITON 05C20–MDW OR EQUAL. DL – INTEGRAL DAYLIGHT SENSOR FOR DAYLIT AREA. (TOTAL OF 2)
CR	CARD READER
LP2/12	HOME RUN CIRCUIT CONCEALED IN WALL OR CEILING TO PANELBOARD, 2#12 AWG +1#12 GND IN 3/4"C. LP2 : PANELBOARD DESIGNATION 12 : CIRCUIT NUMBER
	DISCONNECT PROVIDED BY HVAC CONTRACTOR
	FUSED DISCONNECT SWITCH
	EXISTING ELECTRICAL PANELBOARD
J	JUNCTION BOX
A LP/31	2x2 RECESSED LED LIGHTING 'A' FIXTURE TYPE 'LP/21' INDICATES PANEL LP, CIRCUIT #31 HATCHING INDICATES FIXTURE WITH BATTERY PACK

DRAWING LIST

E001	GENERAL NOTES SYMBOLS AND ABBREVIATIONS
E101	DEMOLITION PLAN
E201	NEW WORK POWER AND DATA PLAN
E202	NEW WORK LIGHTING PLAN
E203	NEW WORK FIRE ALARM PLAN
E501	DETAILS
E601	RISER DIAGRAM AND PANEL SCHEDULES
E701	CODE COMPLIANCE

ABBREVIATIONS

AFF	ABOVE FURNISHED FLOOR
AIC	AMPERE INTERRUPTING CAPACITY
AV	AUDIO VISUAL
CKT	CIRCUIT
E	EXISTING TO REMAIN
EC	EMPTY CONDUIT
EMT	ELECTRICAL METALLIC TUBING
GFI	GROUND FAULT INTERRUPTER
GND	GROUND
NTS	NOT TO SCALE
TEL	TELECOM
TYP	TYPICAL
U.O.N	UNLESS OTHERWISE NOTED
WP	WEATHER PROOF

LIGHTING FIXTURE SCHEDULE

TYPE	DESCRIPTION	MANUFACTURER	CATALOG NUMBER	LAMP DATA QTY.	LAMP DATA TYPE	LAMP DATA TOTAL WATTS	VOLTS	REMARKS
A	2X2 RECESSED LED FIXTURE	SYLVANIA	PANELF 1A 032 UNV D 8 35 22 G WH	1	32W LED	32	UNV	PROVIDE EMERGENCY BATTERY FOR HATCHED LIGHT FIXTURE
B	2x4 RECESSED LED LIGHT FIXTURE	SYLVANIA	PANELF 1A 040 UNV D 8 35 22 G WH	1	40W LED	40	UNV	PROVIDE EMERGENCY BATTERY FOR HATCHED LIGHT FIXTURE
	LED EXIT SIGN	LITHONIA LIGHTING	LRP SERIES	1	3W LED	3	UNV	REFER TO PLAN FOR DIRECTIONAL ARROW

RITTER·NORTON ARCHITECTS
Professional Limited Liability Company
814 King Street, 3rd Floor
Alexandria, Virginia 22314
703.548.4405 t.
703.548.4910 f.
www.ritternorton.com

BUILT ENVIRONMENT ENGINEERS
5289 RICHMOND HIGHWAY
ARLINGTON, VA 22205
703.845.9100 WWW.BEENGINEERS.COM

DC COURTS
INTERIOR ALTERATION
2041 MARTIN LUTHER KING BLVD.SE
SUITE 400
WASHINGTON DC 20020

2019-46
PROJECT NUMBER

REVISIONS
-
3.10.2020

GENERAL NOTES, LEGEND AND ABBREVIATIONS

E001

REVIEW SET
03/05/2020

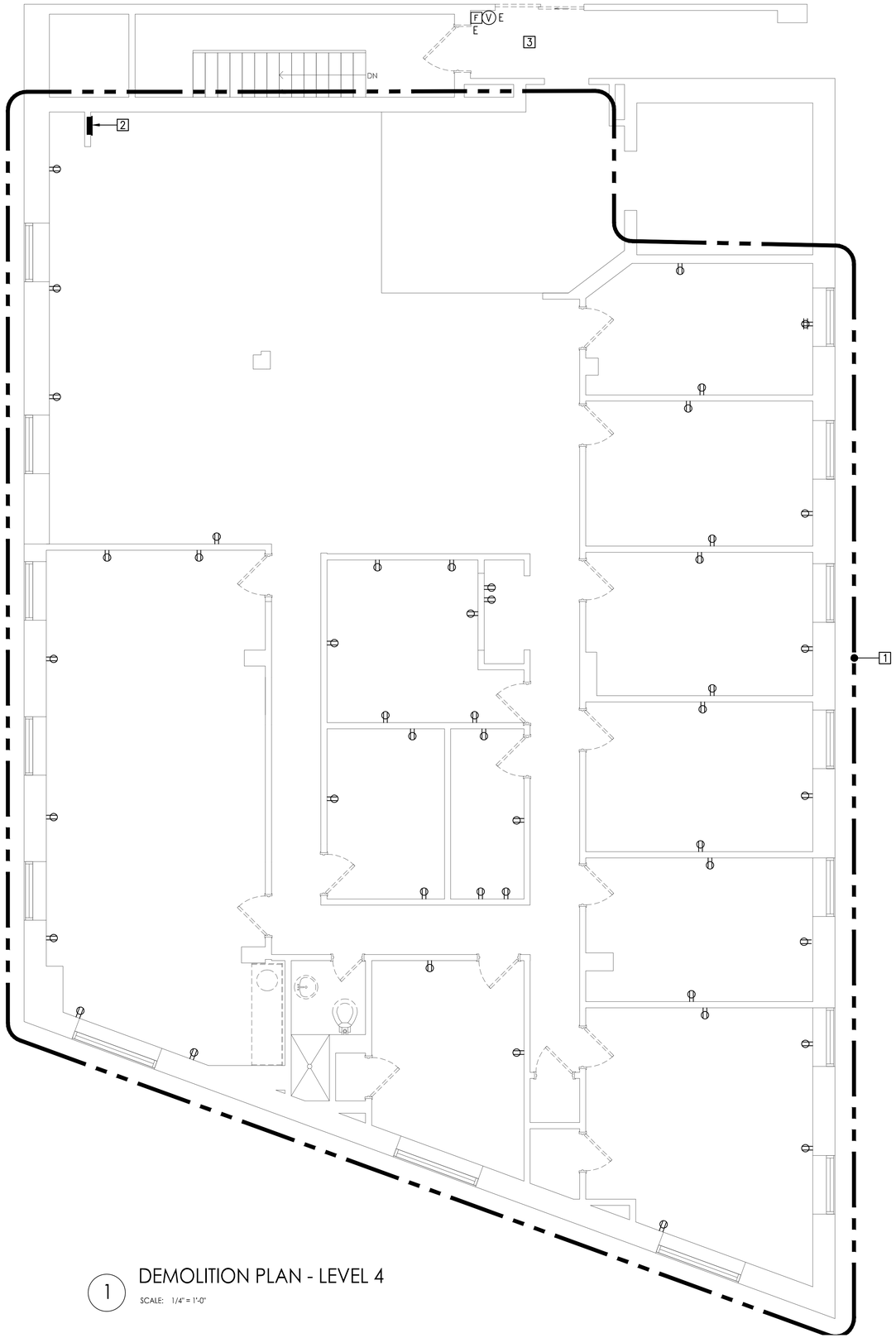

1 DEMOLITION PLAN - LEVEL 4

SCALE: 1/4" = 1'-0"

GENERAL NOTES:

1. AFTER REMOVING ELECTRICAL DEVICE AND LIGHT FIXTURES, CONTRACTOR TO REMOVE ALL ASSOCIATED WIRING AND CONDUITS BACK TO SOURCE.
2. CONCEALED CONDUIT MAY BE LEFT ABANDONED IN PLACE AS LONG AS NOT INTERFERING WITH NEW WORK. REMOVE ALL WIRE AND CAP ENDS.
3. CONTRACTOR SHALL BE RESPONSIBLE FOR DISPOSAL OF ALL DEBRIS RELATED TO ELECTRICAL DEMOLITION.
4. CONTRACTOR IS RESPONSIBLE FOR MAINTAINING THE INTEGRITY OF ALL FIRE AND SMOKE RATED ASSEMBLIES WITHIN THE BUILDING AFFECTED BY WORK UNDER THIS CONTRACT. PATH AND/OR REPAIR ALL FIRE AND SMOKE RATED ASSEMBLIES AS REQUIRED TO MAINTAIN EXISTING OR NEW RATING.
5. CONTRACTOR SHALL SUBMIT AN INVENTORY TO OWNER OF ALL ELECTRICAL DEVICES, EQUIPMENT, ETC. BEING REMOVED.
6. ELECTRICAL CIRCUITS BEING REMOVED SHALL BE REMOVED BACK TO POWER SOURCE. TURN OFF BREAKER AND MARK SPARE.
7. DEMOLITION OF ALL ELECTRICAL EQUIPMENT AND ASSOCIATED WIRING, CONTROLS, SUPPORTS, ETC.
8. IN GENERAL, DEMOLISH ALL ELECTRICAL EQUIPMENT, WIRING, SUPPORTS, TIES, RECEPTACLES, FLOOR RECEPTACLES, LIGHT FIXTURES, EXIST SIGNS, SWITCHES, ETC. SEE FOLLOWING NOTES FOR EXCEPTIONS TO THIS NOTE.
9. CONTRACTOR SHALL VISIT THE SITE AND BRING ANY DISCREPANCIES BETWEEN THE SPACE CONDITIONS AND THE NOTES ABOVE TO THE ATTENTION OF THE ARCHITECT AND ENGINEER. CONTRACTOR SHALL PROVIDE LABOR AND MATERIAL TO ACHIEVE INTENDED DEMOLITION AS INDICATED IN THESE NOTES.
10. WHEN THERE IS A QUESTION OR DOUBT ABOUT THE REQUIREMENT OR METHOD FOR PROPER DEMOLITION OF A PARTICULAR PIECE OF EQUIPMENT, CONSULT ARCHITECT AND ENGINEER FOR PROPER DIRECTION.

TELECOMMUNICATIONS

1. DEMOLITION OF ALL TELECOMMUNICATIONS EQUIPMENT AND ASSOCIATED WIRING, RACKS, SUPPORTS, ETC.
2. IN GENERAL, DEMOLISH ALL VOICE, DATA, CABLE/SATTELITE TV, PAGING AND INTERCOM WIRING AND DEVICES. DEMOLISH ALL J OR D HOOKS AND ABANDONED EQUIPMENT LEFT BY PREVIOUS TENANT. DEMOLISH ALL PRIMARY VOICE LINES BACK TO SOURCE.

FIRE/LIFE SAFETY

1. DEMOLITION OF ALL FIRE/LIFE SAFETY EQUIPMENT AND ASSOCIATED WIRING, DEVICES, SUPPORTS. RETAIN EXISTING FIRE ALARM CIRCUIT IN A JUNCTION BOX FOR NEW TENANT FIT-OUT.
2. IN GENERAL, DEMOLISH ALL EXISTING FIRE ALARM HORN, STROBE/FLASHING LIGHTS, SMOKE DETECTORS, DUCT SMOKE DETECTORS, HEAT DETECTORS, ETC. UNLESS OTHERWISE NOTED. RETAIN FIRE ALARM CIRCUIT IN A JUNCTION BOX FOR NEW TENANT WORK.

KEYED NOTES:

1. REMOVE ALL LIGHT SWITCHES, RECEPTACLES, DATA OUTLETS AND FIRE ALARM DEVICES WITHIN THIS DOTTED LINE, U.N.O. SEE GENERAL NOTES ON THIS SHEET.
2. EXISTING ELECTRICAL PANEL "LP" TO BE RELOCATED. REMOVE ALL BRANCH CIRCUIT AND EXTEND EXISTING SERVICE FEEDER TO NEW PANEL LOCATION.
3. EXISTING FIRE ALARM SYSTEM IN THIS AREA TO REMAIN.

RITTER·NORTON
ARCHITECTS
Professional Limited Liability Company
814 King Street, 3rd Floor
Alexandria, Virginia 22314
703.548.4405 t.
703.548.4910 f.
www.ritternorton.com

BUILT ENVIRONMENT ENGINEERS
5200 WILSON BLVD, STE 100
ARLINGTON, VA 22205
703.840.9585 WWW.BENGINEERS.COM

DC COURTS
INTERIOR ALTERATION
2041 MARTIN LUTHER KING BLVD.SE
SUITE 400
WASHINGTON DC 20020

2019-46
PROJECT NUMBER

REVISIONS
-
3.10.2020

DEMOLITION PLAN

REVIEW SET
03/05/2020

E101

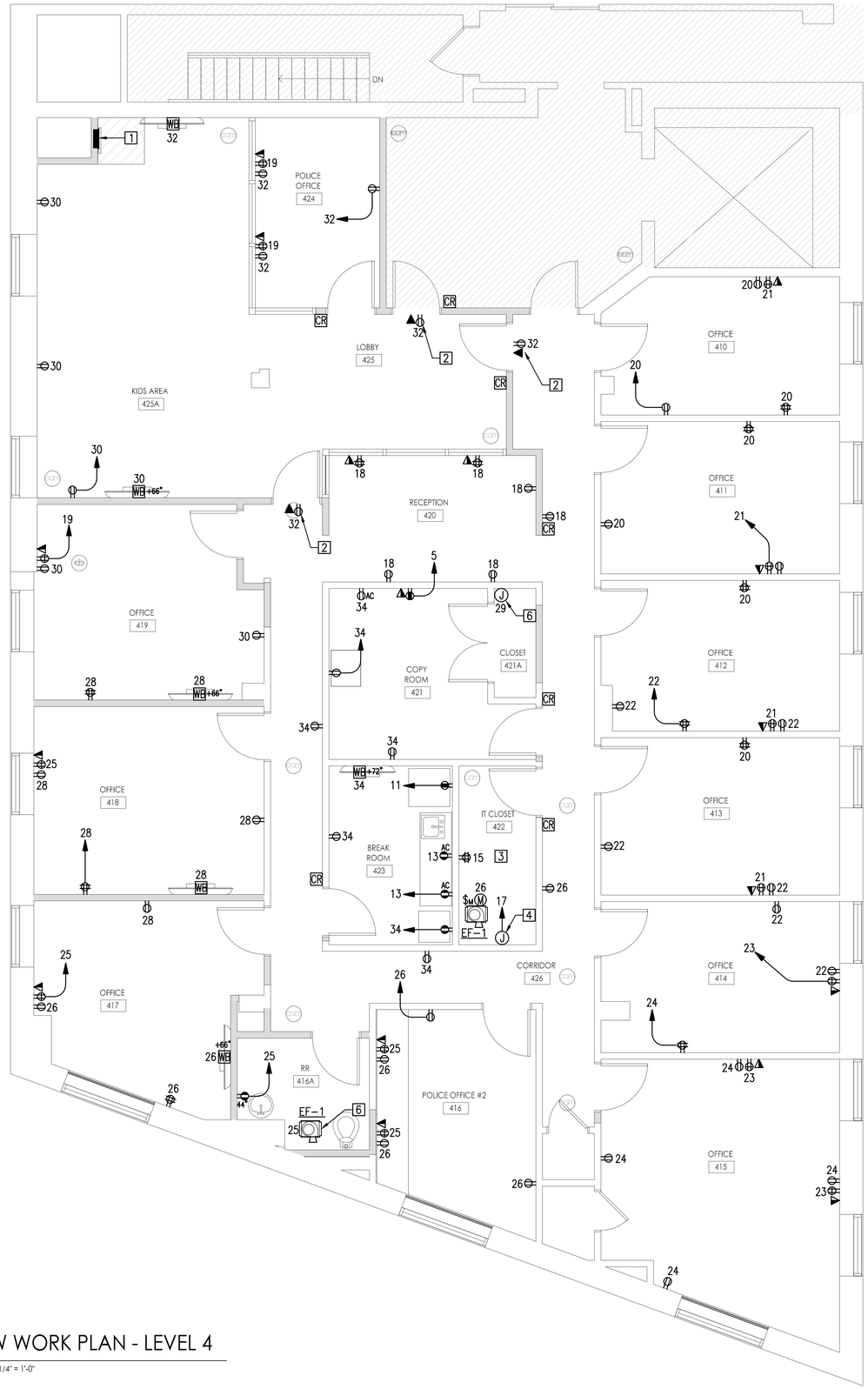

1 NEW WORK PLAN - LEVEL 4

SCALE: 1/4" = 1'-0"

GENERAL NOTES:

A. PROVIDE CONDUIT, WIRE, OVERCURRENT PROTECTION DEVICE, ETC. FOR COMPLETE AND CORRECT ELECTRICAL SYSTEM INSTALLATION AS DEFINED ON THE PLANS AND SPECIFICATIONS.
B. FIELD COORDINATE EXACT ROUTING OF ALL NEW FEEDERS AND BRANCH CIRCUITS.
C. ALL CIRCUITS ARE FED FROM PANEL LP.
D. CIRCUIT NUMBERS SHOWN ARE FOR REFERENCE ONLY. CONTRACTOR SHALL FIELD VERIFY CIRCUIT NUMBERS AND MAKE NECESSARY MODIFICATION TO ACCOMMODATE AS SHOWN ON PLANS AND PANEL SCHEDULES.
E. ALL PENETRATIONS THROUGH FLOOR SLABS AND FIRE RATED WALLS SHALL BE PROPERLY FIRE–STOPPED.
F. VOICE AND DATA INFRASTRUCTURE, CABLING, EQUIPMENT, AND SPECIFICATIONS SHALL BE PROVIDED BY OTHERS. ELECTRICAL CONTRACTOR TO PROVIDE AND COORDINATE RACEWAY, CABLE TRAY, JUNCTION BOX, AND POWER REQUIREMENTS.
G. SECURITY AND VIDEO SURVEILLANCE INFRASTRUCTURE, CABLING, EQUIPMENT, AND SPECIFICATIONS SHALL BE PROVIDED BY OTHERS. ELECTRICAL CONTRACTOR TO PROVIDE AND COORDINATE RACEWAY, CABLE TRAY, JUNCTION BOX, AND POWER REQUIREMENTS. SECURITY AND VIDEO SURVEILLANCE DEVICES ARE SHOWN FOR REFERENCE ONLY.
H. CONNECT TRAP PRIMER VALVES TO NEAREST 120V RECEPTACLE CIRCUIT.

KEYED NOTES:

1. RELOCATED PANEL 'LP'.
2. DUPLEX RECEPTACLE AND VIDEO SIGNAL PLATE (SINGLE GANG PLATE). REFER TO ELECTRONIC SECURITY SYSTEM DRAWING PACKAGE BY JOHNSON CONTROLS FOR MORE INFORMATION.
3. PROVIDE BASKET CABLE TRAY AS SHOWN ON SECURITY PLAN. PROVIDE ¾" FIRE RATED PLYWOOD (4'x8') BACKBOARD FOR SECURITY EQUIPMENT. COORDINATE WITH IT VENDOR.
4. JUNCTION BOX FOR IT/SECURITY EQUIPMENT.
5. EXHAUST FAN CONNECTED TO LIGHT SWITCH.
6. JUNCTION BOX FOR HEAT TRACE. COORDINATE EXACT LOCATION WITH PLUMBING DRAWINGS.

RITTER·NORTON ARCHITECTS
Professional Limited Liability Company
814 King Street, 3rd Floor
Alexandria, Virginia 22314
703.548.4405 t.
703.548.4910 f.
www.ritternorton.com

BUILT ENVIRONMENT ENGINEERS
5285 WOODMONT BLVD
ARLINGTON, VA 22205
703.845.0545 WWW.BEENGINEERS.COM

DC COURTS INTERIOR ALTERATION

2041 MARTIN LUTHER KING BLVD.SE
SUITE 400
WASHINGTON DC 20020

2019-46
PROJECT NUMBER

REVISIONS
-
3.10.2020

NEW WORK POWER AND DATA PLAN

E201

REVIEW SET
03/05/2020

1 NEW WORK LIGHTING PLAN - LEVEL 4

SCALE: 1/4" = 1'-0"

GENERAL NOTES:

A. PROVIDE WIRE, CONDUITS RACEWAY, POWER PACKS ETC. LIGHTING CONTROL DEVICE MANUFACTURER TO VERIFY ALL INFORMATION INDICATED ON THIS PLAN, AND MODIFY DEVICE TYPE AND LAYOUT AS NEEDED FOR A COMPLETE FUNCTIONAL LIGHTING CONTROL SYSTEM.

B. CONNECT ALL EXIT SIGNS TO NEAREST LIGHTING CIRCUIT AHEAD OF SWITCHED LEG.

C. CORRIDOR LIGHTING SHALL BE CONTROLLED VIA CEILING MOUNTED OCCUPANCY SENSOR AND SHALL BE AUTOMATICALLY REDUCE CONNECTED LIGHTING POWER BY NOT LESS THAN 45% DURING PERIODS WHEN OCCUPANTS ARE NOT PRESENT.

KEYED NOTES:

1. CONNECT TO EXISTING EMERGENCY LIGHTING CIRCUIT SERVING LOWER LEVEL EMERGENCY LIGHTING PANEL "SH-LL" LOCATED IN ELECTRICAL CLOSET.
2. CONNECT EXTERIOR EMERGENCY EGRESS LIGHTS VIA PHOTOCELL AND TIME CLOCK.
3. EMERGENCY BATTERY BACK-UP UNIT FOR LIGHT FIXTURE IN MRI ROOM SHALL BE LOCATED OUTSIDE THE ROOM.
4. CONTRACTOR TO FIELD COORDINATE IF EXISTING/RELOCATED LIGHTING FIXTURES IN THIS ROOM ARE DIMMABLE. IF NOT, PROVIDE NEW BUILDING STANDARD DIMMABLE LIGHT FIXTURE.

RITTER·NORTON ARCHITECTS
Professional Limited Liability Company
814 King Street, 3rd Floor
Alexandria, Virginia 22314
703.548.4405 t.
703.548.4910 f.
www.ritternorton.com

BUILT ENVIRONMENT ENGINEERS
5285 WOODMONT BLVD
ARLINGTON, VA 22205
703.845.9585 WWW.BEENGES.COM

DC COURTS
INTERIOR ALTERATION
2041 MARTIN LUTHER KING BLVD.SE
SUITE 400
WASHINGTON DC 20020

2019-46
PROJECT NUMBER

REVISIONS
-
3.10.2020

NEW WORK
LIGHTING PLAN

E202

REVIEW SET
03/05/2020

1 NEW WORK FIRE ALARM PLAN - LEVEL 4

SCALE: 1/4" = 1'-0"

GENERAL NOTES:

A. COORDINATE WITH ARCHITECTURAL PLANS, DETAILS, AND ELEVATIONS FOR ANY CONFLICT REGARDING THE LOCATIONS, MOUNTING HEIGHTS FOR ALL FIRE ALARM DEVICES. INFORM ELECTRICAL ENGINEER FOR NEW LOCATION PRIOR TO ROUGH–IN.

B. FIELD COORDINATE EXACT ROUTING OF ALL NEW FEEDERS AND BRANCH CIRCUITS.

C. CONNECT NEW FIRE ALARM DEVICES TO BASE BUILDING FIRE ALARM SYSTEM. FIRE ALARM SYSTEM VENDOR SHALL MODIFY OR EXPAND BASE BUILDING FIRE ALARM SYSTEM AS REQUIRED TO ACCOMMODATE NEW DEVICES. DURING FIRE ALARM DEVICE ADDITION WITHIN THE SUITE, COORDINATE ANY DISRUPTION OF FIRE ALARM SYSTEM OPERATION WITH DC FIRE MARSHAL. PROVIDE CONDUIT, WIRE, RELAYS, DEVICES, ETC. FOR COMPLETE FIRE ALARM INSTALLATION AS DEFINTED ON PLAN. ALL WIRING CIRCUITRY AND CONNECTIONS SHALL BE AS RECOMMENDED BY FIRE ALARM MANUFACTURER AND BE APPROVED BY LOCAL FIRE MARSHAL.

D. GC SHALL USE LANDLORD'S LIFE SAFETY CONTRACTOR FOR ALL FIRE ALARM SYSTEM TIE–IN WORK.

E. SHADED AREA NOT IN PROJECT SCOPE. ALL EXISTING FIRE ALARM VISUAL, AUDIO/VISUAL, AND MANUAL PULL STATION DEVICES ARE TO REMAIN.

KEYED NOTES:

1. ----

RITTER·NORTON
ARCHITECTS
Professional Limited Liability Company

814 King Street, 3rd Floor
Alexandria, Virginia 22314
703.548.4405 t.
703.548.4910 f.
www.ritternorton.com

BUILT ENVIRONMENT ENGINEERS
5125 WILSON BOULEVARD
ARLINGTON, VA 22205
703.840.0400 WWW.BEENGINEERS.COM

DC COURTS INTERIOR ALTERATION

2041 MARTIN LUTHER KING BLVD.SE
SUITE 400
WASHINGTON DC 20020

2019-46
PROJECT NUMBER

REVISIONS
-
3.10.2020

NEW WORK
FIRE ALARM
PLAN

E203

REVIEW SET
03/05/2020

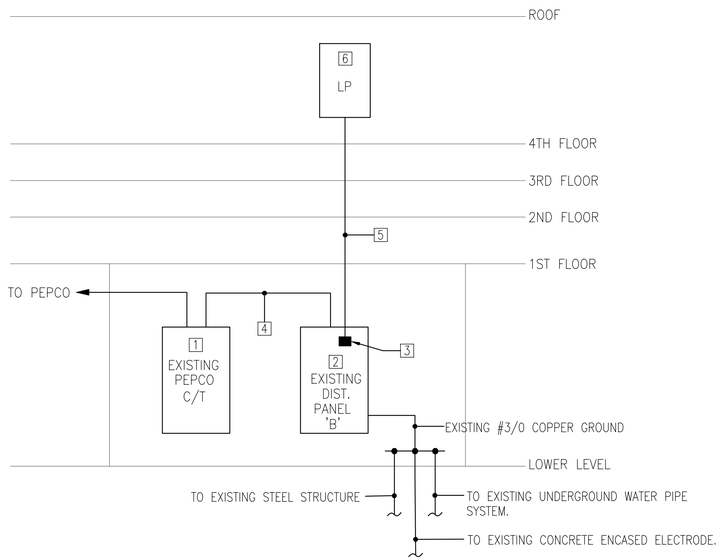

EXISTING PARTIAL RISER DIAGRAM

NOT TO SCALE

GENERAL NOTES:

A. FIELD COORDINATE EXACT ROUTING OF ALL NEW FEEDER AND BRANCH CIRCUITS.

B. PROVIDE ACCURATE UPDATED PANELBOARD DIRECTORY FOR ALL PANELBOARDS. TURN 'OFF' ALL SPARE BREAKERS.

C. NEW WORK ON RISER DIAGRAM SHOWN BY BOLDED LINES.

D. PER LEASE ELECTRICAL SUBMETERING AGREEMENT, PROVIDE SUBMETER TO ALL EQUIPMENT WITH RATINGS IN EXCESS OF 2kW INCLUDING BUT NOT LIMITED TO MRI MACHINE, CT SCAN, HEAT EXCHANGE CABINET, PCR, CHILLER, HEAT PUMPS ETC.

KEYED NOTES:

1. EXISTING PEPCO APPROVED CT, 120/208V, 3 PHASE, 4 WIRE.
2. EXISTING 1200A, 3PH, 4 WIRE DISTRIBUTION PANEL LOCATED IN MAIN ELECTRICAL ROOM.
3. EXISTING 3P/200A CIRCUIT BREAKER IN EXISTING DISTRIBUTION PANEL.
4. EXISTING FEEDER AND CONDUIT TO REMAIN.
5. EXISTING 4 #3/0 + 1 #6G – 2 1/2"C – COPPER CONDUCTOR
6. EXISTING 200A, 120/208V, 3 PHASE, 4 WIRE PANELBOARD

ADD ALTERNATE:

REPLACE EXISTING 200A, 3 PHASE, 4 WIRE 120/208V WITH NEW 200A, 3PH, 4 WIRE, 120/208V PANELBOARD. (SIEMENS OR SQUARE D)

PANELBOARD: LP (EXISTING) | FED FROM: MDP | MOUNTING: SURFACE | MAIN OCP: 200A/3P BUS AMPACITY: 200A | VOLTAGE: 120/208V, 3PH, 4W AIC RMS: 22KAIC

TYPE	DESCRIPTION	DEV.	CKT	LOAD/PHASE (VA) A	B	C	A	B	C	CKT	DEV.	DESCRIPTION	TYPE
	SPARE	30/2	1							2	15/3	SPARE	
			3							4			
R	COPY ROOM PRINTER	20/1	5			900				6			
	SPARE	40/2	7							8	40/2	SPARE	
			9							10			
K	BREAK ROOM REFRIGERATOR	20/1	11							12	20/1	SPARE	
K	BREAK ROOM COUNTER GFCI	20/1	13							14	20/1	SPARE	
E	IT DEDICATED QUAD - SUCURITY	20/1	15		1200			1080		16	20/1	COMPUTER RECEPTACLES - 416-418	R
E	IT DEDICATED JUNCTION BOX	20/1	17			1000			1080	18	20/1	RECEPTION AREA RECEPTACLES	R
H	COMPUTER RECEPTACLES 419&424	20/1	19	1440			1440			20	20/1	GENERAL RECEPTACLES	R
R	COMPUTER RECEPTACLES 410-413	20/1	21		1440			1440		22	20/1	GENERAL RECEPTACLES	R
R	COMPUTER RECEPTACLES 414-415	20/1	23			1440			1220	24	20/1	GENERAL RECEPTACLES	R
R	COMPUTER RECEPTACLES 416-418	20/1	25	1440			1220			26	20/1	GENERAL RECEPTACLES	R
R	RESTROOM GFCI & FAN	20/1	27		360			1220		28	20/1	GENERAL RECEPTACLES	R
H	HEAT TRACE	20/1	29			700			1220	30	20/1	GENERAL RECEPTACLES	R
L	LIGHTING	20/1	31	780			1220			32	20/1	GENERAL RECEPTACLES	R
L	LIGHTING	20/1	33		1064			700		34	20/1	WATER COOLER	E
	SPACE		35							36	60/3	SPARE	
	SPACE		37							38			
	SPACE		39							40			
		20/1	41							42	20/1	SPARE	
SUBTOTAL (VA)				3,660	4,064	4,040	3,880	4,440	3,520	SUBTOTAL (VA)			
SUB-TOTAL ALL PHASES (VA)				PHASE A 7,540		PHASE B 8,504		PHASE C 7,560		* ARC-FAULT CIRCUIT BREAKER ** GFCI CIRCUIT BREAKER			

LOAD SUMMARY BY TYPE			CONNECTED		DEMAND
R	=	RECEPTACLE	16,720	VA	13,360 VA
L	=	LIGHTING	1,844	VA	2,305 VA
E	=	EQUIPMENT	2,900	VA	2,900 VA
K	=	KITCHEN EQUIP	0	VA	0 VA
M	=	MOTOR	0	VA	0 VA
X	=	LARGEST MOTOR	0	VA	0 VA
H	=	ELECTRIC HEAT	2,140	VA	2,140 VA

CONNECTED LOAD SUMMARY
23,604 VA
66 AMPS

NEC LOAD SUMMARY
20,705 VA
57 AMPS

RITTER•NORTON ARCHITECTS
Professional Limited Liability Company
814 King Street, 3rd Floor
Alexandria, Virginia 22314
703.548.4405 t.
703.548.4910 f.
www.ritternorton.com

BUILT ENVIRONMENT ENGINEERS
5200 WILSON BOULEVARD
ARLINGTON, VA 22205
703.841.0545 WWW.BEENGES.COM

DC COURTS
INTERIOR ALTERATION
2041 MARTIN LUTHER KING BLVD.SE
SUITE 400
WASHINGTON DC 20020

2019-46
PROJECT NUMBER

REVISIONS
-
3.10.2020

PARTIAL RISER DIAGRAM AND PANEL SCHEDULES

E601

REVIEW SET
03/05/2020

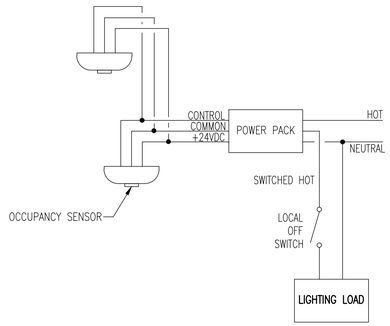

NOTES:

1. COORDINATE LAMPS, BALLAST, SWITCH, OCCUPANCY SENSOR, AND POWER PACK FOR COMPATIBILITY AND CONTROL.
2. PROVIDE COMPLETE INSTALLATION PER MANUFACTURER'S RECOMMENDATIONS.

1 MULTIPLE OCCUPANCY SENSOR WIRING SCHEMATIC

SCALE: NOT TO SCALE

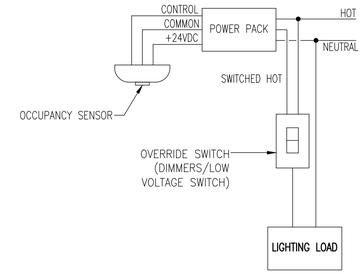

NOTES:

1. COORDINATE LAMPS, BALLAST, SWITCH, OCCUPANCY SENSOR, AND POWER PACK FOR COMPATIBILITY AND CONTROL.
2. PROVIDE COMPLETE INSTALLATION PER MANUFACTURER'S RECOMMENDATIONS.
3. PROVIDE OVERRIDE SWITCH FOR ON/OFF/AUTO SWITCHING.
4. OVERRIDE SWITCH TO OVERRIDE OCCUPANCY SENSOR FOR 30 MINUTES OR MAX. FOR LOCAL CODE.

2 OCCUPANCY SENSOR W/ MANUAL OVERRIDE WIRING SCHEMATIC

SCALE: NOT TO SCALE

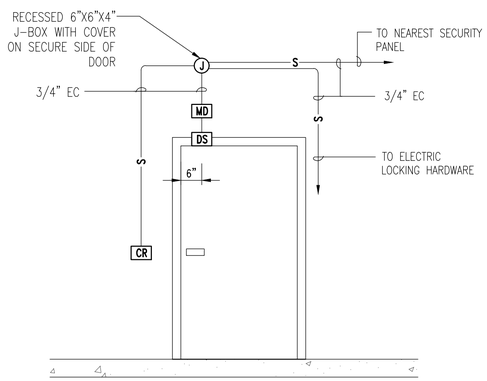

3 CARD READER ROUGH-IN DETAIL

SCALE: NOT TO SCALE

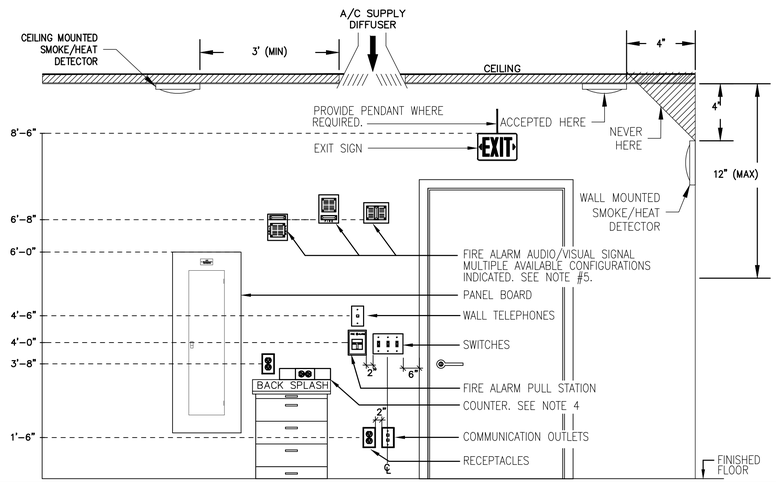

NOTES:

1. DEVICE LOCATIONS AND MOUNTING HEIGHTS SHALL BE CHECKED AGAINST THE ARCHITECTURAL PLANS AND ELEVATIONS PRIOR TO ROUGH-IN IN ORDER TO AVOID INTERFERENCE'S WITH FURNITURE, WINDOWS, MIRRORS, EQUIPMENT, ETC.
2. LOCATIONS OF OUTLETS AND EQUIPMENT AS INDICATED ON THE DRAWINGS ARE APPROXIMATE. THE EXACT CENTER OF ALL OUTLETS SHALL BE PLACED IN COOPERATION WITH THE GENERAL CONTRACTOR AND ARCHITECT. CONTRACTOR SHALL EXAMINE ALL INTERIOR DETAILS OF THE CONSTRUCTION DRAWINGS FOR OUTLET LOCATIONS NOT CONFORMING TO THE DETAIL ABOVE. WHERE DETAILED TO SPECIFIC LOCATIONS, THE ARCHITECTURAL DRAWINGS SHALL TAKE PRECEDENCE. IF AN OUTLET IS INSTALLED IN SUCH A LOCATION AS TO BE OUT OF PROPER RELATION TO WALLS OR DETAILS OF THE BUILDING, ITS LOCATION SHALL BE CORRECTED BY AND AT THE EXPENSE OF THE CONTRACTOR UNDER THE DIRECTION OF THE ARCHITECT OR ENGINEER.
3. DEVICE SHALL BE CENTERED IN A COMMON VERTICAL PLANE. HEIGHT SHALL BE MEASURED FROM FINISHED FLOOR TO CENTERLINE OF DEVICE EXCEPT EXIT SIGNS, AND FIRE ALARM SIGNALS. COORDINATE LOCATION WITH MATERIALS SUCH AS MASONRY UNITS.
4. REFER TO THE ARCHITECT'S ELEVATION DETAILS FOR EXACT MOUNTING HEIGHT AND LENGTH OF SURFACE RACEWAYS. RECEPTACLE MOUNTING HEIGHT ABOVE COUNTERS SHALL BE COORDINATED WITH CASEWORK HEIGHTS.
5. THE ENTIRE LENS OF A FIRE ALARM, EMERGENCY NOTIFICATION SIGNAL, OR VISUAL-ONLY SIGNAL SHALL BE LOCATED BETWEEN 6'-8" A.F.F. AND 8'-0" A.F.F. OR 6" BELOW CEILING (WHICHEVER IS LOWER). ELEVATION SHALL BE CONSISTENT THROUGHOUT PROJECT.

4 DEVICE/FIXTURE MOUNTING ELEVATION DETAIL

SCALE: NONE

RITTER·NORTON
ARCHITECTS
Professional Limited Liability Company

814 King Street, 3rd Floor
Alexandria, Virginia 22314
703.548.4405 t.
703.548.4910 f.
www.ritternorton.com

BUILT ENVIRONMENT ENGINEERS
5520 MCKINNEY AVENUE
ARLINGTON, VA 22205
703.845.9345 WWW.BEENGINEERS.COM

DC COURTS
INTERIOR ALTERATION
2041 MARTIN LUTHER KING BLVD.SE
SUITE 400
WASHINGTON DC 20020

2019-46
PROJECT NUMBER

REVISIONS
3.10.2020

DETAILS

REVIEW SET
03/05/2020

E501

COM*check* Software Version 4.1.1.0

Interior Lighting Compliance Certificate

Project Information

Energy Code: 2015 IECC
Project Title: DC Court Interior Renovation - 4th Floor
Project Type: Alteration

Construction Site: Martin Luther King Blvd
Owner/Agent:
Designer/Contractor:

Allowed Interior Lighting Power

A Area Category	B Floor Area (ft2)	C Allowed Watts / ft2	D Allowed Watts (B X C)
1-Corridor (Common Space Types:Corridor/Transition <8 ft wide)	412	0.66	272
2-Kids/Lobby Area (Common Space Types:Lobby - General)	506	0.90	455
3-Private Offices (Common Space Types:Office - Enclosed)	1884	1.11	2091
4-Reception (Common Space Types:Lobby - General)	117	0.90	105
5-Pantry (Common Space Types:Food Preparation)	100	1.21	121
6-IT Room (Common Space Types:Electrical/Mechanical)	64	0.95	61
7-Restroom (Common Space Types:Restrooms)	65	0.98	64
8-Copy (Common Space Types:Copy/Print Room)	132	0.72	95
		Total Allowed Watts =	3264

Proposed Interior Lighting Power

A Fixture ID : Description / Lamp / Wattage Per Lamp / Ballast	B Lamps/ Fixture	C # of Fixtures	D Fixture Watt.	E (C X D)
Corridor (Common Space Types:Corridor/Transition <8 ft wide 412 sq.ft.)				
LED 1: Type A: 2x2 LED Recessed Light - 32W: Other:	1	12	32	384
Kids/Lobby Area (Common Space Types:Lobby - General 506 sq.ft.)				
LED 2: Type B: 2x4 LED Recessed Light - 40W: Other:	1	6	40	240
Private Offices (Common Space Types:Office - Enclosed 1884 sq.ft.)				
LED 3: Type B: 2x4 LED Recessed Light - 40W: Other:	1	23	40	920
Reception (Common Space Types:Lobby - General 117 sq.ft.)				
LED 4: Type B: 2x4 LED Recessed Light - 40W: Other:	1	2	40	80
Pantry (Common Space Types:Food Preparation 100 sq.ft.)				
LED 5: Type A: 2x2 LED Recessed Light - 32W: Other:	1	2	32	64
IT Room (Common Space Types:Electrical/Mechanical 64 sq.ft.)				
LED 6: Type B: 2x4 LED Recessed Light - 40W: Other:	1	1	40	40
Restroom (Common Space Types:Restrooms 65 sq.ft.)				
LED 7: Type A: 2x2 LED Recessed Light - 32W: Other:	1	1	32	32
Copy (Common Space Types:Copy/Print Room 132 sq.ft.)				
LED 1: Type B: 2x4 LED Recessed Light - 40W: Other:	2	2	40	80
			Total Proposed Watts =	1840

Interior Lighting PASSES

Interior Lighting Compliance Statement

Compliance Statement: The proposed interior lighting alteration project represented in this document is consistent with the building plans, specifications, and other calculations submitted with this permit application. The proposed interior lighting systems have been designed to meet the 2015 IECC requirements in COM*check* Version 4.1.1.0 and to comply with any applicable mandatory requirements listed in the Inspection Checklist.

Name - Title Signature Date

COM*check* Software Version 4.1.1.0

Inspection Checklist

Energy Code: 2015 IECC

Requirements: 0.0% were addressed directly in the COM*check* software

Text in the "Comments/Assumptions" column is provided by the user in the COMcheck Requirements screen. For each requirement, the user certifies that a code requirement will be met and how that is documented, or that an exception is being claimed. Where compliance is itemized in a separate table, a reference to that table is provided.

Section # & Req.ID	Plan Review	Complies?	Comments/Assumptions
C103.2 [PR4][1]	Plans, specifications, and/or calculations provide all information with which compliance can be determined for the interior lighting and electrical systems and equipment and document where exceptions to the standard are claimed. Information provided should include interior lighting power calculations, wattage of bulbs and ballasts, transformers and control devices.	☐Complies ☐Does Not ☐Not Observable ☐Not Applicable	

Additional Comments/Assumptions:

1	High Impact (Tier 1)	2	Medium Impact (Tier 2)	3	Low Impact (Tier 3)

Section # & Req.ID	Rough-In Electrical Inspection	Complies?	Comments/Assumptions
C405.2.1 [EL15][1]	Lighting controls installed to uniformly reduce the lighting load by at least 50%.	☐Complies ☐Does Not ☐Not Observable ☐Not Applicable	
C405.2.1 [EL18][1]	Occupancy sensors installed in required spaces.	☐Complies ☐Does Not ☐Not Observable ☐Not Applicable	
C405.2.1, C405.2.2.3 [EL23][2]	Independent lighting controls installed per approved lighting plans and all manual controls readily accessible and visible to occupants.	☐Complies ☐Does Not ☐Not Observable ☐Not Applicable	
C405.2.2.1 [EL22][2]	Automatic controls to shut off all building lighting installed in all buildings.	☐Complies ☐Does Not ☐Not Observable ☐Not Applicable	
C405.2.3 [EL16][2]	Daylight zones provided with individual controls that control the lights independent of general area lighting.	☐Complies ☐Does Not ☐Not Observable ☐Not Applicable	
C405.2.3, C405.2.3.1, C405.2.3.2 [EL20][1]	Primary sidelighted areas are equipped with required lighting controls.	☐Complies ☐Does Not ☐Not Observable ☐Not Applicable	
C405.2.3, C405.2.3.1, C405.2.3.3 [EL21][1]	Enclosed spaces with daylight area under skylights and rooftop monitors are equipped with required lighting controls.	☐Complies ☐Does Not ☐Not Observable ☐Not Applicable	
C405.2.4 [EL4][1]	Separate lighting control devices for specific uses installed per approved lighting plans.	☐Complies ☐Does Not ☐Not Observable ☐Not Applicable	
C405.2.4 [EL8][1]	Additional interior lighting power allowed for special functions per the approved lighting plans and is automatically controlled and separated from general lighting.	☐Complies ☐Does Not ☐Not Observable ☐Not Applicable	
C405.3 [EL6][1]	Exit signs do not exceed 5 watts per face.	☐Complies ☐Does Not ☐Not Observable ☐Not Applicable	

Additional Comments/Assumptions:

1	High Impact (Tier 1)	2	Medium Impact (Tier 2)	3	Low Impact (Tier 3)

Section # & Req.ID	Final Inspection	Complies?	Comments/Assumptions
C303.3, C408.2.5.2 [FI17][3]	Furnished O&M instructions for systems and equipment to the building owner or designated representative.	☐Complies ☐Does Not ☐Not Observable ☐Not Applicable	
C405.4.1 [FI18][1]	Interior installed lamp and fixture lighting power is consistent with what is shown on the approved lighting plans, demonstrating proposed watts are less than or equal to allowed watts.	☐Complies ☐Does Not ☐Not Observable ☐Not Applicable	*See the Interior Lighting fixture schedule for values.*
C408.2.5.1 [FI16][3]	Furnished as-built drawings for electric power systems within 90 days of system acceptance.	☐Complies ☐Does Not ☐Not Observable ☐Not Applicable	
C408.3 [FI33][1]	Lighting systems have been tested to ensure proper calibration, adjustment, programming, and operation.	☐Complies ☐Does Not ☐Not Observable ☐Not Applicable	

Additional Comments/Assumptions:

1	High Impact (Tier 1)	2	Medium Impact (Tier 2)	3	Low Impact (Tier 3)

RITTER•NORTON
ARCHITECTS
Professional Limited Liability Company
814 King Street, 3rd Floor
Alexandria, Virginia 22314
703.548.4405 t.
703.548.4910 f.
www.ritternorton.com

BUILT ENVIRONMENT ENGINEERS
5109 WILSON BOULEVARD
ARLINGTON, VA 22205
703.845.9040 WWW.BEENGS.COM

DC COURTS
INTERIOR ALTERATION
2041 MARTIN LUTHER KING BLVD.SE
SUITE 400
WASHINGTON DC 20020

2019-46
PROJECT NUMBER

REVISIONS
-
3.10.2020

CODE COMPLIANCE

REVIEW SET
03/05/2020

E701

GENERAL NOTES

1. SCOPE: FURNISH ALL LABOR, MATERIALS, TOOLS, EQUIPMENT, SERVICES AND SKILLED SUPERVISION NECESSARY TO PROVIDE, INSTALL, TEST AND ADJUST HVAC AND PLUMBING SYSTEMS COMPLETE, OPERATIONAL, AND READY FOR USE, AS INDICATED IN THESE DRAWINGS AND SPECIFICATIONS.

2. PERMITS, LICENSES & FEES: PAY ALL REQUIRED FEES AND OBTAIN ALL NECESSARY PERMITS AND LICENSES FOR LEGAL REMOVAL AND INSTALLATION OF THE WORK.

3. APPLICABLE CODES AND STANDARDS: ALL WORK SHALL BE PERFORMED IN ACCORDANCE WITH THE FOLLOWING CODES AND STANDARDS AND ANY REGULATIONS EFFECTIVE IN THE PROJECT JURISDICTION. ALL CODE CONFLICTS SHALL BE BROUGHT TO THE ATTENTION OF THE OWNER FOR RESOLUTION. APPLICABLE CODES AND STANDARDS ON THIS PROJECT INCLUDE, BUT ARE NOT LIMITED TO, THE FOLLOWING:

   A. ICC, INTERNATIONAL BUILDING CODE 2012
   B. ICC, INTERNATIONAL MECHANICAL CODE 2012
   C. ICC, INTERNATIONAL PLUMBING CODE 2012
   D. ICC, INTERNATIONAL ENERGY CONSERVATION CODE, 2012
   D. IGCC, INTERNATIONAL GREEN CONSTRUCTION CODE, 2012
   E. NFPA 70, NATIONAL ELECTRIC CODE
   F. NFPA 101, LIFE SAFETY CODE
   G. DISTRICT OF COLUMBIA BUILDING CODE SUPPLEMENT OF 2013

4. DRAWING ACCURACY: DRAWINGS ARE DIAGRAMMATIC AND NOT INTENDED TO BE SCALED. WHEN INDICATED, ALL WORK SHALL BE PHYSICALLY LOCATED IN ACCORDANCE WITH ANNOTATED DIMENSIONS ON ARCHITECTURAL PLANS, ELEVATIONS AND DETAILS.

5. SITE VISIT: THE CONTRACTOR SHALL VISIT THE SITE AND SHALL FAMILIARIZE HIMSELF WITH THE EXISTING CONDITIONS, EQUIPMENT, DUCTWORK, PIPING, WIRING, CONSTRUCTION, FINISHES, AND STRUCTURE PRIOR TO START OF WORK. WHEN ANY DISCREPANCY OR CONFLICT IS DETECTED AT THE PROJECT SITE, THE OWNER SHALL BE NOTIFIED IMMEDIATELY PRIOR TO COMMENCING WORK.

6. COORDINATION: CONTRACTOR SHALL COORDINATE AND SEQUENCE THE WORK OF ALL DIVISIONS AND TRADES PRIOR TO FABRICATION AND INSTALLATION OF DUCTWORK AND RACEWAYS. COORDINATE THE LOCATION OF ALL NEW EQUIPMENT, DUCTWORK, AND DEVICES WITH NEW STRUCTURE AND EQUIPMENT BEFORE FABRICATION. MAKE NECESSARY ACCOMMODATIONS TO MEET THE INTENT OF THE DRAWINGS AND ENSURE A COORDINATED INSTALLATION.

7. SUBMITTALS AND SUBSTITUTIONS: CONTRACTOR SHALL PROVIDE PRODUCT INFORMATION, SHOP DRAWINGS, DOCUMENTS AND WARRANTIES FOR MATERIALS AND SERVICES TO THE OWNER FOR APPROVAL. NO SUBSTITUTION WILL BE ALLOWED WITHOUT PERMISSION OF THE OWNER'S REPRESENTATIVE IN WRITING. SUBSTITUTE MATERIAL SHALL BE COMPATIBLE WITH OTHER COMPONENTS OF THE SYSTEM.

8. INSTALLATION OF NEW WORK: INSTALLATION OF EQUIPMENT, DUCTWORK, PIPING, FIXTURES, ETC. SHALL BE DONE IN NEAT AND WORKMANLIKE MANNER, AND SHALL CONFORM TO THE LATEST TRADE PRACTICES. REFER TO ARCHITECTURAL DRAWINGS TO VERIFY EXACT LOCATION OF EQUIPMENT, FIXTURES, ETC. COORDINATE DUCTWORK AND PIPING WITH THE WORK OF OTHER TRADES PRIOR TO FABRICATION. MAKE NECESSARY ACCOMMODATIONS TO MEET THE INTENT OF THE DRAWINGS AND ENSURE A COORDINATED INSTALLATION.

9. DRAWINGS ARE DIAGRAMMATIC AND REPRESENT THE INTENT OF THE CONTRACT. DESIGN DRAWINGS ARE NOT TO BE CONSIDERED AS SUBSTITUTION TO SHOP DRAWINGS. DRAWINGS SHALL BE FOLLOWED AS CLOSELY AS CONDITIONS ALLOW TO COMPLETE THE INTENT OF THE CONTRACT. THE RIGHT IS RESERVED BY THE ENGINEER TO MAKE MINOR CHANGES IN LOCATIONS AND ARRANGEMENTS WHEN REQUIRED BY JOB DEVELOPMENT WITHOUT ADDITIONAL COMPENSATION TO THE CONTRACTOR.

10. MOUNTING HEIGHTS: COORDINATE MOUNTING HEIGHTS OF DEVICES ON FINISHED WALLS TO PROVIDE A NEAT AND SYMMETRICAL APPEARANCE. SEE ARCHITECTURAL PLANS, ELEVATIONS AND DETAILS FOR HEIGHTS AND LOCATIONS OF EQUIPMENT. DIMENSIONS, UNLESS OTHERWISE NOTED, ARE TO CENTERLINE OF EQUIPMENT.

11. WARNING SIGNS: PROVIDE SIGNS, BARRICADES, GUARDS, AND PROTECTION FOR SAFETY DURING CONSTRUCTION. WORK AREA SHALL BE KEPT CLEAN, CLEAR OF OBSTRUCTIONS, WELL ILLUMINATED, AND UNDER ORGANIZED MATERIAL STORAGE.

12. FIRE STOPPING: REFER TO ARCHITECTURAL PLANS FOR DETAILS AND REQUIREMENTS FOR CONDUIT AND PIPING PENETRATIONS THROUGH WALLS, FLOORS AND CEILINGS.

13. REPAIR: ALL WORK SHALL BE DONE IN SUCH A MANNER TO MINIMIZE DAMAGE TO ADJACENT EQUIPMENT, PIPING, DUCTWORK, WIRING, FIXTURES, CONSTRUCTION, FINISHES AND STRUCTURE. ANY DAMAGE RESULTING FROM WORK UNDER THIS PROJECT SHALL BE REPAIRED OR REPLACED BY THE CONTRACTOR TO THE SATISFACTION OF THE OWNER AT NO ADDITIONAL COST.

14. CLEANING & MATERIAL DISPOSITION: CLEAR ALL DEBRIS FROM THE AREA OF WORK AND LEAVE SITE IN CLEAN CONDITION. CLEAN ALL EQUIPMENT ENCLOSURES, INSIDE AND OUTSIDE. ALL DEMOLISHED EQUIPMENT AND DEBRIS NOT TO BE REUSED OR SALVAGED SHALL BE REMOVED FROM THE SITE AND PROPERLY DISPOSED OF IN ACCORDANCE WITH APPLICABLE REGULATIONS.

15. HAZARDOUS MATERIALS: IF SUSPECTED HAZARDOUS MATERIALS ARE ENCOUNTERED IN AREAS EXPECTED TO CONTAIN ACMs, PCBs, OR LEAD, THE CONTRACTOR SHALL CEASE DEMOLITION ACTIVITIES AND NOTIFY THE OWNER.

16. PROVIDE DIELECTRIC PIPING UNIONS BETWEEN DISSIMILAR METALS.

17. PIPING SHALL NOT COME INTO DIRECT CONTACT WITH CONCRETE OR STRUCTURE IN ANY LOCATION.

18. VALVES AND PIPING ACCESSORIES SHALL BE IN LINE SIZE. PROVIDE SUPPLY STOP VALVES AT ALL NON–FLUSH VALVE TYPE FIXTURES.

GENERAL NOTES

19. PROVIDE CODE COMPLIANT (ASSE) BACKFLOW PREVENTER WITH SHUT OFF VALVES, UNION, AND ESCUTCHEON AT EACH EQUIPMENT CONNECTION THAT REQUIRES A POTABLE WATER CONNECTION.

20. CONTRACTOR IS PROHIBITED FROM USING LEAD–BASED SOLDER.

21. ALL PIPING PENETRATING CEILINGS AND WALLS SHALL BE INSTALLED WITH ESCUTCHEONS AT PENETRATION. PIPING PENETRATING EXTERIOR WALLS, ROOFS AND FLOOR AND CEILING SHALL BE FLASHED IN APPROVED MANNER AND SHALL BE SEALED WATERTIGHT TO MAINTAIN INTEGRITY OF SEPARATION. PIPING PENETRATING FIRE RATED PARTITIONS SHALL BE INSTALLED WITH FIRE RATED SEALS AS REQUIRED BY ARCHITECT AND AUTHORITY HAVING JURISDICTION.

22. PROVIDE ACCESS TO SYSTEM COMPONENTS THAT ARE CONCEALED AND REQUIRE PERIODIC SERVICE.

23. PLUMBING EQUIPMENT, PIPING, INSULATION, ETC., INSTALLED IN HVAC PLENUM SPACES SHALL MEET CODE REQUIREMENTS FOR SMOKE DEVELOPMENT AND COMBUSTIBILITY.

24. PROVIDE SHUTOFF VALVES ON BRANCH PIPING AND SUPPLIES TO INDIVIDUAL FIXTURES AND EQUIPMENT. PROVIDE VALVES ON ALL WATER, ETC, MAIN BRANCHES IN CORRIDORS AND WHERE INDICATED ON DRAWINGS. VALVES SHALL BE INSTALLED WITH STEM UP. VALVES INSTALLED SHALL BE PERMANENTLY ACCESSIBLE FOR VALVES 3" DIAMETER AND SMALLER AND SHALL BE CHAIN OPERATED FOR VALVES LARGER THAN 3" DIAMETER.

25. VERIFY EXACT SIZES, LOCATIONS, INVERTS AND ELEVATIONS PRIOR TO RUNNING ANY PIPING. REFER TO ARCHITECTURAL & CIVIL DRAWINGS FOR EXACT LOCATIONS OF FIXTURES AND EQUIPMENT.

26. SLOPE HORIZONTAL WASTE PIPING AS FOLLOWS: 2–1/2" DIAMETER AND SMALLER @2%, 3" DIAMETER AND LARGER @1% IN DIRECTION OF FLOW.

27. GUARANTEE: ALL PLUMBING WORK SHALL BE GUARANTEED FOR A PERIOD OF ONE YEAR FROM THE DATE OF ACCEPTANCE OF THE FINAL INSTALLATION BY THE OWNER'S REPRESENTATIVE.

28. ALL ABANDONED PLUMBING PIPING SHALL BE REMOVED (BOTH FROM ABOVE CEILINGS AND BELOW SLAB).

FIRE PROTECTION NOTES

1. CONTRACTOR SHALL PROVIDE FIRE SPRINKLER SYSTEM. INSTALLATION OF SPRINKLER SYSTEM SHALL INCLUDE BUT NOT BE LIMITED TO THE FOLLOWING COMPONENTS: SPRINKLERS, PIPE, FITTINGS, HANGERS, AND ALL OTHER NECESSARY COMPONENTS FOR A COMPLETE SPRINKLER SYSTEM INSTALLATION.

2. CONTRACTOR SHALL PERFORM A FLOW TEST TO VERIFY THE EXISTING WATER SUPPLY. ALL SYSTEM PIPE SIZES (EXCEPT RISERS AND FLOOR CONTROL VALVE ASSEMBLIES) SHALL BE DETERMINED UTILIZING HYDRAULIC CALCULATIONS BASED ON CURRENT TEST RESULTS.

3. SPRINKLER SYSTEM FOR DESIGN OFFICE SPACE SHALL BE DESIGNED BASED ON LIGHT HAZARD OCCUPANCY.

4. ALL SPRINKLER PIPING SHALL BE CONCEALED, UON.

5. ALL CONCRETE AND/OR MASONRY WALL AND FLOOR PENETRATIONS SHALL BE CORE DRILLED WITH MASONRY TYPE CORE BIT. ALL WALLS AND FLOORS SHALL BE EXAMINED FOR HIDDEN OBSTRUCTIONS PRIOR TO CORE DRILLING.

6. PROVIDE PIPE SLEEVES FOR ALL WALL AND FLOOR PENETRATIONS. ALL PENETRATIONS IN WALLS, CEILINGS AND FLOORS SHALL BE SEALED TO THE FULL THICKNESS OF THE PENETRATIONS WITH APPROVED FIRE STOPPING MATERIAL OF EQUAL OR GREATER FIRE RESISTANCE. STAIRWAYS, SHAFT ENCLOSURES, AND FLOOR SLABS ARE TO BE CONSIDERED TWO–HOUR FIRE RESISTIVE RATED CONSTRUCTION.

7. CONTRACTOR SHALL PROVIDE AUXILIARY LOW POINT DRAINS WHERE REQUIRED PER NFPA 13. WHERE AUXILIARY DRAINS ARE INSTALLED BEHIND HARD CEILINGS, ACCESSIBLE PANEL SHALL BE PROVIDED DIRECTLY BENEATH THE DRAIN.

8. ALL AUXILIARY DRAIN INSTALLED IN CAPACITY GREATER THAN 5 GALLONS SHALL BE INSTALLED WITH DRAIN VALVE, HOSE BIB, AND CAP.

9. CONTRACTOR SHALL BE RESPONSIBLE FOR AVOIDING CONFLICTS WITH LIGHTING FIXTURES, DIFFUSERS, GRILLS, DUCTS, PIPING, CONDUIT, STRUCTURAL MEMBERS, AND OTHER OBSTRUCTIONS ENCOUNTERED.

10. WELDING INSIDE THE BUILDING IS NOT PERMITTED.

11. NO STRUCTURAL MEMBERS SHALL BE CUT, DRILLED, OR BURNED UNLESS PREVIOUSLY APPROVED BY THE PROJECT ARCHITECT. CONTRACTOR SHALL NOT CUT OR PATCH STRUCTURAL MEMBERS IN A MANNER THAT WOULD RESULT IN A REDUCTION OF LOAD–CARRYING OR LOAD–DEFLECTION RATIO.

12. FIELD COORDINATE ALL SPRINKLER PIPES WITH ALL NEW BUILDING SYSTEMS.

13. GUARANTEE: ALL FIRE PROTECTION WORK SHALL BE GUARANTEED FOR A PERIOD OF ONE YEAR FROM THE DATE OF ACCEPTANCE OF THE FINAL INSTALLATION BY THE OWNER'S REPRESENTATIVE.

14. ALL ABANDONED SPRINKLER PIPE SHALL BE REMOVED FROM ABOVE CEILINGS.

15. ALL EXISTING TO REMAIN AND NEW SPRINKLER HEADS SHALL MATCH THE MANUFACTURERS DATA SHEET (TYPE, TEMPERATURE, K–FACTOR) OR ELSE REPLACE ALL EXISTING SPRINKLER HEADS SO THAT ALL SPRINKLER HEADS MATCH.

DRAWING LIST

P001	GENERAL NOTES, SYMBOLS, AND ABBREVIATIONS
P100	DEMOLITION PLAN
P200	NEW WORK PLAN
P501	DETAILS, SCHEDULES, AND RISER DIAGRAMS

ABBREVIATIONS

ABV	ABOVE
ASME	AMERICAN SOC. OF MECHANICAL ENGINEERS
ASTM	AMERICAN SOC. FOR TESTING & MATERIAL
ATPV	AUTOMATIC TRAP PRIMER VALVE
BEL	BELOW
CO	CLEANOUT
CW	COLD WATER
DN	DOWN
DWG	DRAWING
ED	EMERGENCY FLOOR DRAIN
EWH	ELECTRIC WATER HEATER
FCO	FLOOR CLEANOUT
FD	FLOOR DRAIN
HW	HOT WATER
NIC	NOT IN CONTRACT
NTS	NOT TO SCALE
UON	UNLESS OTHERWISE NOTED
VIF	VERIFY IN FIELD

PIPE LINE TYPES

	SANITARY PIPE ABOVE FLOOR
	SANITARY PIPE BELOW FLOOR
	VENT
	COLD WATER
	HOT WATER
	FIRE PROTECTION
	SPRINKLER PIPE
	GAS
STU	STORM PIPE (UNDERGROUND)
	HEAT TRACING

SYMBOLS

	P TRAP
	PIPE BREAK (SINGLE LINE)
	PIPE FITTING DOWN OR DROP
	PIPE FITTING TEE DOWN
	PIPE FITTING UP
	SHUT OFF VALVE
	CHECK VALVE – BACKFLOW PREVENTER
	CLEANOUT
	CAP OR END OF PIPE
	OS&Y

RITTER•NORTON
ARCHITECTS
Professional Limited Liability Company
814 King Street, 3rd Floor
Alexandria, Virginia 22314
703.548.4405 t.
703.548.4910 f.
www.ritternorton.com

BUILT ENVIRONMENT ENGINEERS
5520 WILSON BOULEVARD
ARLINGTON, VA 22205
703.845.0166 WWW.BEENGINEERS.COM

DC COURTS
INTERIOR ALTERATION
2041 MARTIN LUTHER KING BLVD.SE
SUITE 400
WASHINGTON DC 20020

2019-46
PROJECT NUMBER

REVISIONS
-
3.10.2020

GENERAL NOTES, SYMBOLS, AND ABBREVIATIONS

REVIEW SET
03/05/2020

P001

1 DEMOLITION PLAN - LEVEL 4

SCALE: 1/4" = 1'-0"

GENERAL NOTES:

A. SEE DRAWING P001 FOR SYMBOLS, ABBREVIATIONS AND NOTES.
B. REFER TO RISER DIAGRAM FOR ADDITIONAL INFORMATION NOT SHOWN.
C. FIELD VERIFY ADDITIONAL PIPING NOT SHOWN ON PLANS. VARIATIONS MAY BE ENCOUNTERED DURING DEMOLITION/CONSTRUCTION.

KEYED NOTES:

1. EXISTING SANITARY STACK TO REMAIN.
2. BELOW FLOOR SLAB CW AND HW. HW RUNS BACK TO CIRCULATING LOOP IN 3RD FLOOR UTILITY CLOSET ACROSS FROM SERVICE ELEVATOR.
3. DEMOLISH EXISTING SINK, WATER CLOSET, AND SHOWER AND ASSOCIATED ABANDONED PIPING (SAN., CW, HW). DEMOLISH VENT PIPING UP TO VENT THROUGH ROOF.
4. EXISTING STORM RISER THROUGH ROOF TO REMAIN.
5. EXISTING VENT RISER THROUGH ROOF TO REMAIN.
6. EXISTING 2" VENT THROUGH ROOF TO REMAIN.
7. CONFIRM IN FIELD IF SANITARY STACK RUNS THROUGH WALL UP TO ROOF. IF EXISTING, DEMOLISH PIPE FROM BELOW 4TH FLOOR SLAB TO BELOW ROOF. REROUTE PIPE THROUGH NEW WALL VIA FLOOR PLAN P201.

RITTER·NORTON
ARCHITECTS
Professional Limited Liability Company
814 King Street, 3rd Floor
Alexandria, Virginia 22314
703.548.4405 t.
703.548.4910 f.
www.ritternorton.com

BUILT ENVIRONMENT ENGINEERS
5520 RICHMOND HIGHWAY
ARLINGTON, VA 22205
703.845.9345 WWW.BENGINC.COM

DC COURTS
INTERIOR ALTERATION
2041 MARTIN LUTHER KING BLVD.SE
SUITE 400
WASHINGTON DC 20020

2019-46
PROJECT NUMBER

REVISIONS
-
3.10.2020

DEMOLITION PLAN

REVIEW SET
03/05/2020

P101

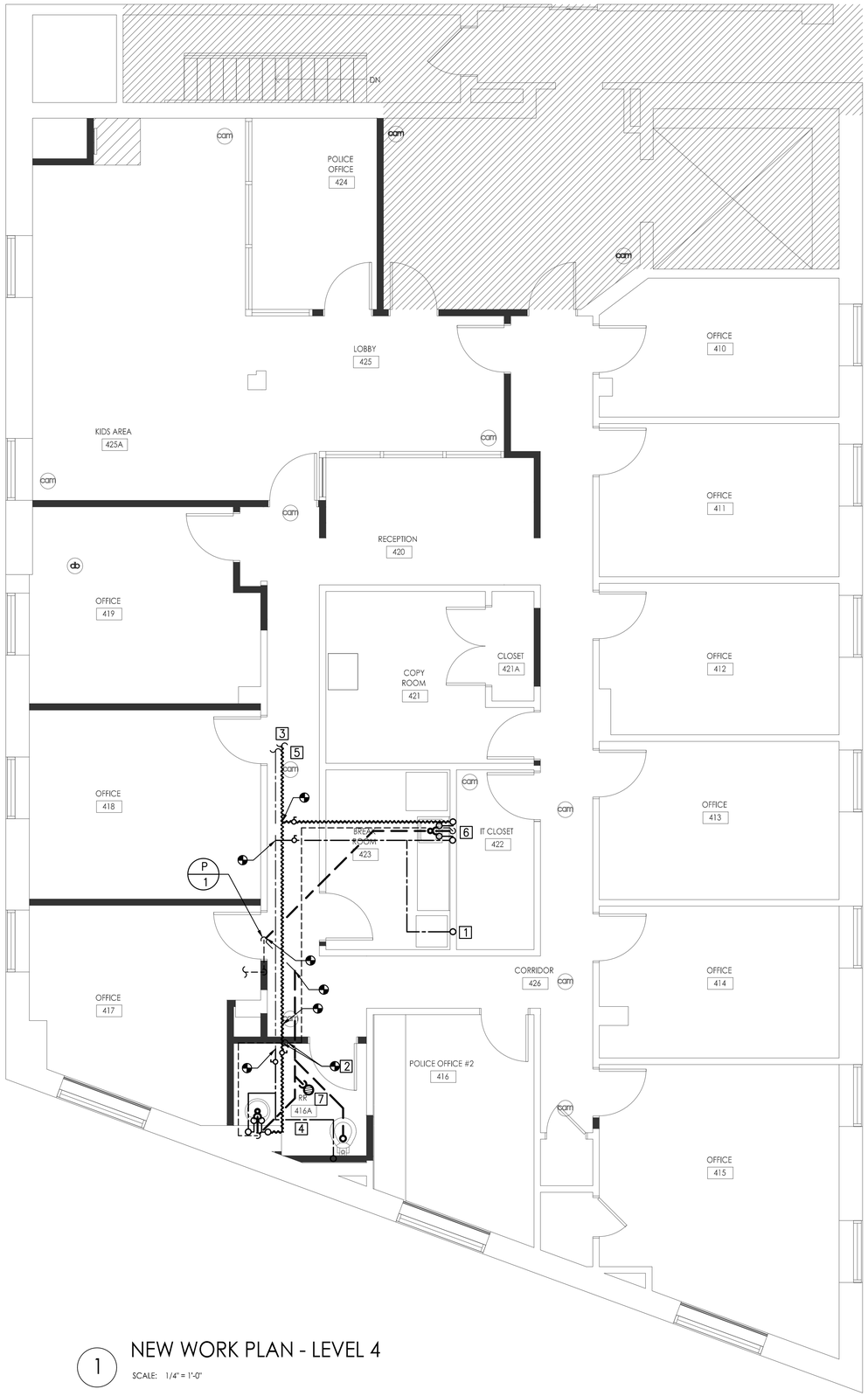

1 NEW WORK PLAN - LEVEL 4

SCALE: 1/4" = 1'-0"

GENERAL NOTES:

A. SEE DRAWING P001 FOR SYMBOLS, ABBREVIATIONS AND NOTES.
B. REFER TO RISER DIAGRAM FOR ADDITIONAL INFORMATION NOT SHOWN.
C. FIELD VERIFY ADDITIONAL PIPING NOT SHOWN ON PLANS. VARIATIONS MAY BE ENCOUNTERED DURING DEMOLITION/CONSTRUCTION.

KEYED NOTES:

1. CW LINE UP TO WATER COOLER.
2. CONNECT TO EXISTING 2" VTR.
3. EXTEND HEAT TRACING AND INSULATION BACK TO ACTIVE HOT WATER LOOP.
4. RECONNECT PLUMBING (SAN, VENT, HW, CW) TO WC AND LAV.
5. CW AND HW PIPING RUN BELOW SLAB.
6. PROVIDE PLUMBING (SAN, VENT, HW, CW) FOR PSK.
7. PROVIDE TRAP PRIMER VALVE FOR FLOOR DRAIN. OWNER OPTION TO PROVIDE TRAP GUARD AS ALTERNATIVE.

RITTER·NORTON
ARCHITECTS
Professional Limited Liability Company
814 King Street, 3rd Floor
Alexandria, Virginia 22314
703.548.4405 t.
703.548.4910 f.
www.ritternorton.com

BUILT ENVIRONMENT ENGINEERS
5200 WILSON BOULEVARD
ARLINGTON, VA 22205
703.840.9585 WWW.BEENGINEERS.COM

DC COURTS INTERIOR ALTERATION

2041 MARTIN LUTHER KING BLVD.SE
SUITE 400
WASHINGTON DC 20020

2019-46
PROJECT NUMBER

REVISIONS
-
3.10.2020

NEW WORK PLAN

REVIEW SET
03/05/2020

P201

PLUMBING FIXTURE SCHEDULE

TAG	FIXTURE (LOCATION)	MAX FLOW RATE (GPM/GPF)	PIPE DIAMETER (INCH.)					BASIS OF DESIGN		MOUNTING	COLOR / MATERIAL	ACCESSORY MODEL #'S	REMARKS
			CW	HW	TW	DRAIN	VENT	MANUFACTURER	MODEL NUMBER				
WC	WATER CLOSET (RR, 116A)	1.1	1	–	–	4	2	ZURN	Z5665-BWL1-LL	FLOOR	VITREOUS CHINA	FLUSH VALVE: ZTR6200-ONE	ADA COMPLIANT WATERSENSE COMPLIANT
LAV	LAVATORY (RR, 116A)	0.5	1/2	–	1/2	2	1 1/2	BRADLEY	LVRD1	WALL		FAUCET: BRADLEY S53-315	ADA COMPLIANT INFRARED FAUCET BATTERY: IR-DCG
PSK	PANTRY SINK (BREAK ROOM, 123)	1.5	1/2	1/2	–	1 1/2	1 1/2	KOHLER	STACCATO K3362-1	TOP MOUNT	STAINLESS STEEL	FAUCET: KOHLER FORTE K10415	ADA COMPLIANT FAUCET.

MIXING VALVE SCHEDULE

TAG	SERVICE	LOCATION	TYPE	CONNECTION SIZE (INCH)		DELIVERY FLOW (GPM)	PRESSURE DROP (PSI)	OUTLET TEMPERATURE (°F)	BASIS OF DESIGN		ASSE REQUIREMENT	REMARKS
				INLET	OUTLET				MANUFACTURER	MODEL NUMBER		
TV	LAVATORY	RR, 116A	TEMPERING	0.5	0.5	4	5	105	LAWLER	570(86821-01)	1070	W/INTEGRAL CHECK VALVES & INTEGRAL STRAINER

WATER HAMMER ARRESTER SCHEDULE

TAG	FIXTURE UNIT RANGE	MODEL NUMBER PER MANUFACTURER			
		ZURN	WADE	SMITH	JOSAM
PDI-A	1-11	100	W-5	5005	75001
PDI-B	12-32	200	W-10	5010	75002
PDI-C	33-60	300	W-20	5020	75003
PDI-D	61-113	400	W-50	5030	75004

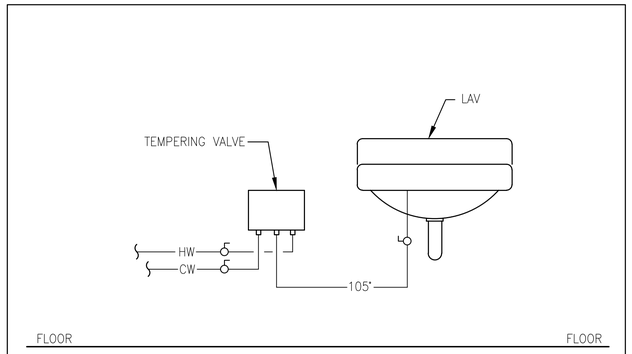

1 TEMPERING VALVE DETAIL
SCALE: NONE

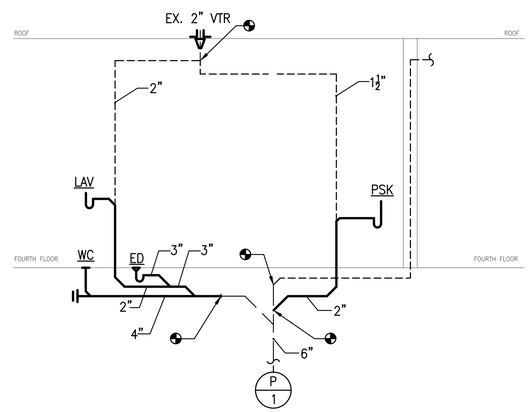

SANITARY RISER DIAGRAM
SCALE: N.T.S.

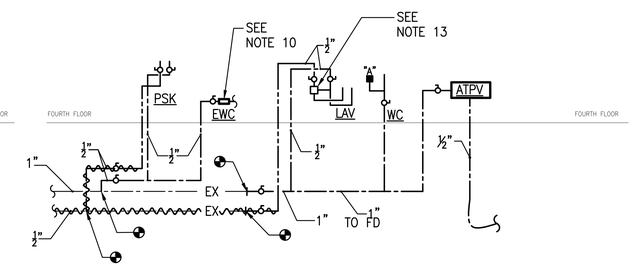

DOMESTIC WATER RISER DIAGRAM
SCALE: N.T.S.

SANITARY RISER NOTES:
1. PROVIDE ACCESS PANELS AS REQUIRED BY CODE FOR SANITARY CLEANOUTS.
2. REFER TO PLUMBING FIXTURE SCHEDULE FOR ADDITIONAL PIPE SIZES NOT SHOWN.
3. ABOVE-GRADE SANITARY & VENT PIPING:
   a) CAST IRON, HUBLESS AND SHALL CONFORM TO CISPI STANDARD 301; HUBLESS COUPLINGS SHALL CONFORM TO THE CISPI STANDARD 310 & GASKETS SHALL CONFORM TO ASTM C564.
   b) TYPE "DWV" COPPER WITH SOLDER DWV FITTINGS AND JOINTS.
4. BELOW-GRADE SANITARY:
   a) CAST IRON (ASTM A74), SERVICE WEIGHT, WITH CAST IRON FITTINGS, AND HUB/SPIGOT JOINTS (CISPI HSN COMPRESSION TYPE WITH ASTM C564 NEOPRENE GASKETS.
5. ALL CAST IRON SOIL PIPE & FITTINGS SHALL BE MARKED WITH THE COLLECTIVE TRADEMARK OF THE CAST IRON SOIL PIPE INSTITUTE (CISPI) AND SHALL BE LISTED BY NSF INTERNATIONAL.
6. REFER TO FLOOR PLANS AND SCHEDULES FOR PIPING AND SIZES NOT SHOWN.
7. PROVIDE TRAP PRIMERS AT ALL FLOOR DRAINS. TRAP GUARDS ALLOWED AS SUBSTITUTION WITH OWNER APPROVAL.
8. ALL FLOOR DRAINS ACT AS EMERGENCY DRAINS AND DO NOT CARRY DFU'S.
9. ALL PIPING TO BE PROVIDED PERMANENT LABELS (SANITARY, VENT).

DOMESTIC WATER RISER NOTES:
1. ALL CW & HW PIPING TO BE INSULATED & JACKETED. INSULATE ALL DOMESTIC HOT AND COLD WATER PIPING WITH A MINIMUM 1" WALL FIBERGLASS INSULATION.
2. PIPE INSULATION FOR HOT WATER PIPING SHALL BE INSULATED WITH NOT LESS THAN 1 INCH INSULATION & HAVE A 'K' VALUE OF 0.23 AT 75°F AND BE FLEXIBLE GLASS FIBER MEETING ASTM C547 STANDARD.
3. DOMESTIC WATER PIPING SHALL BE TYPE 'L' SEAMLESS HARD COPPER TUBING MEETING ASTM B88-95A.
4. REFER TO PLUMBING FIXTURE SCHEDULE FOR ADDITIONAL PIPE SIZES NOT SHOWN.
5. PROVIDE ACCESS PANELS AS REQUIRED BY CODE FOR BRANCH SHUT OFF VALVES.
6. PROVIDE SHUT OFF VALVES AS REQUIRED BY CODE.
7. PROVIDE SHOCK ARRESTORS WHERE REQUIRED BY CODE.
8. REFER TO FLOOR PLANS AND SCHEDULES FOR PIPING AND SIZES NOT SHOWN.
9. ALL "BACKFLOW" DEVICES MUST BE TESTED, UNDER A TESTING PERMIT, BY AN AUTHORIZED AND LICENSED BACKFLOW TESTING MECHANIC AFTER INSTALLATION AND PRIOR TO BEING PUT INTO SERVICE.
10. DUAL CHECK VALVE TO MEET ASSE 1022.
11. ALL PIPING TO BE PROVIDED PERMANENT LABELS (CW, HW).
12. PROVIDE HEAT TRACING TO HORIZONTAL DOMESTIC HOT WATER PIPING AS ILLUSTRATED ON PLAN. HEAT TRACING TO BE SIMILAR TO CHROMALOX HWM5-1CT TO MAINTAIN WATER AT 105F. POWER HEAT TRACING THROUGH TIME CLOCK IN ORDER TO ENERGIZE TRACING DURING OCCUPIED HOURS. PROVIDE DEDICATED CIRCUIT AT 120V. PROVIDE WITH QUICK CONNECTION COMPONENTS FOR CONNECTING OF COMPONENTS.
13. MEETS 1070 AND SET TO 105 F.

REVIEW SET
03/05/2020

RITTER-NORTON ARCHITECTS
Professional Limited Liability Company
814 King Street, 3rd Floor
Alexandria, Virginia 22314
703.548.4405 t.
703.548.4910 f.
www.ritternorton.com

BUILT ENVIRONMENT ENGINEERS
5200 WILSON BLVD, STE 100
ARLINGTON, VA 22205
703.845.0545 WWW.BEENGRS.COM

DC COURTS
INTERIOR ALTERATION
2041 MARTIN LUTHER KING BLVD.SE
SUITE 400
WASHINGTON DC 20020

2019-46
PROJECT NUMBER

REVISIONS
-
3.10.2020

DETAILS, SCHEDULES, AND RISER DIAGRAMS

P501