© 2019 IBI GROUP

Isometric 3D View

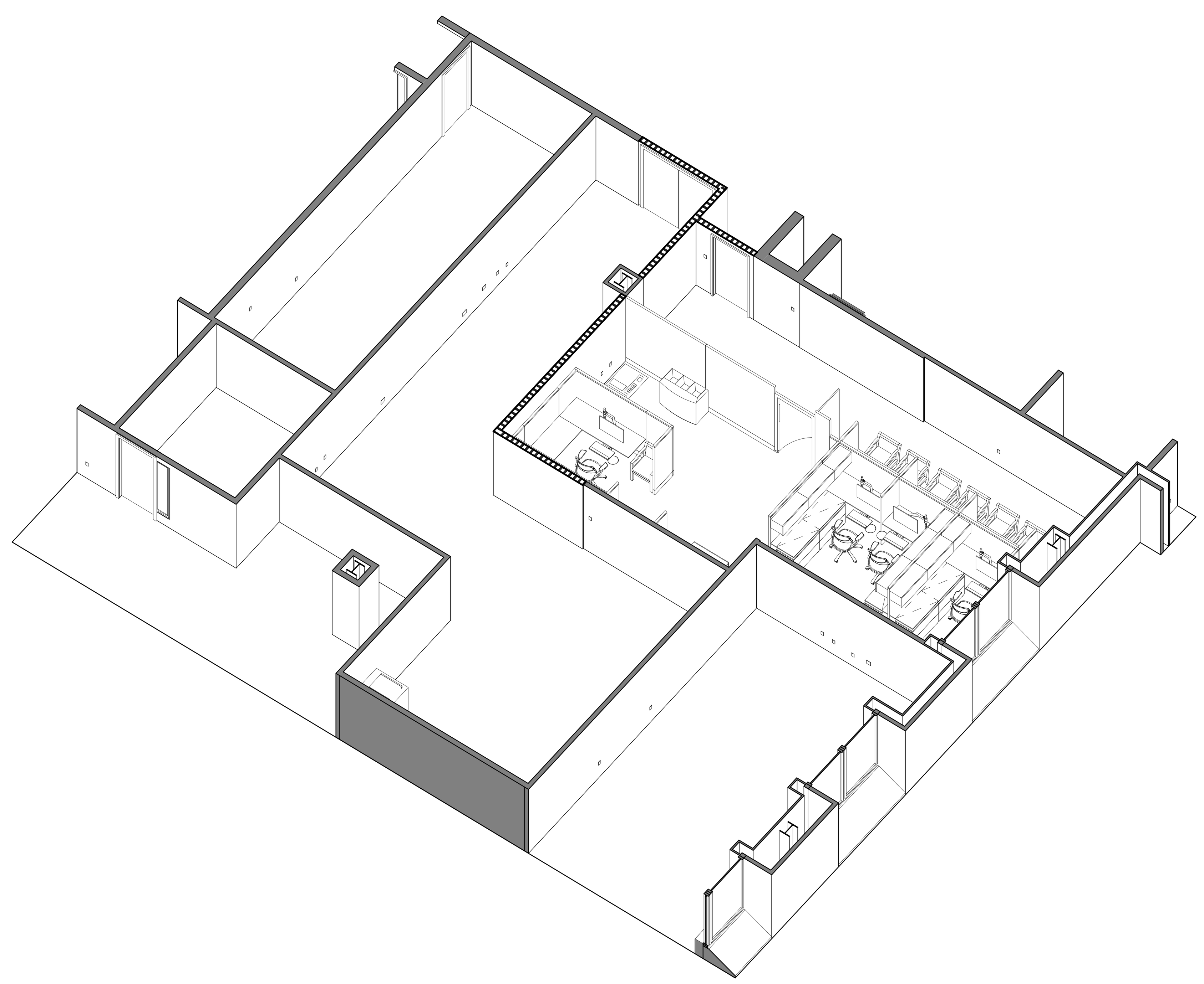

Project Title

Construction Documents for Interior Improvement to::
Fourth Floor East Suite 4475 Renovations
Permit Set
11/8/2019

Building Address

H. Carl Moultrie I Courthouse
500 Indiana Avenue NW
Washington DC 20001

Standard Abbreviations

∠	angle
@	at
℄	centerline
#	number
℘	plate
φ	round/phase (elec.)
AFF	above finished floor
ACT	acoustical tile
ADJ	adjacent
A/C	air conditioning
ALT	alternate
BLK	block
BLKG	blocking
CPT	carpet(ed)
CLG	ceiling
CT	ceramic tile
CLR	clear(ance)
COL	column
CONC	concrete
CMU	concrete masonry unit
CONS	construction
T	continuous or
CONT	continue
DTL	detail
DIAG	diagonal
DIAM	diameter
DIM	dimension
DIV	division
DBL	double
DN	down
DWR	drawer
DWG	drawing
EA	each
E	east
ELEC	electric(al)
EL	elevation
ELEV	elevator
EMER	emergency
ENCL	enclose(ure)
EQ	equal
EQPT	equipment
EST	estimate
EXH	exhaust
EXIST.	existing
EXP	exposed
EXT	exterior
FAB	fabric
FT	feet, foot
FIN	finish(ed)
FFE	finished floor elevation
FFL	finished floor line
FA	fire alarm
FE	fire extinguisher
FEC	fire extinguisher cab.
FF	finished floor
FHS	fire hose station/ fire standpipe
FLR	floor(ing)
FLUOR	fluorescent
FH	full height
FS	full size
FW	full width
FBO	furnished by others
FBT	furnished by tenant
FUT	future
GA	gage, gauge
GC	general contract(or)
GL	glass, glazing
GFI	ground fault
GYP	interrupter
BD	gypsum wall board
HDW	hardware
HWD	hardwood
HDR	header
HTG	heating
HVAC	heating/ventilating/ air conditioning
HT	height
HC	hollow core
HM	hollow metal
HO	horizontal
R	
IN	inch
INCL	include(d), (ing)
INFO	information
ID	inside diameter
INST	install(ed), (ation)
INT	interior
JC	janitor's closet
JT	joint
JB	junction box
KD	knock
KO	down
	knock out
LBS	pounds
LAM	laminate(d)
LAV	lavatory
L	length
LT	light
LF	linear feet
LG	long
MFR	manufacture(r)
MAS	masonry
MAX	maximum
MED	medium
MET	metal
MEZZ	mezzanine
MWK	millwork
MIN	minimum
MISC	miscellaneous
MOD	modular
MLDG	molding, moulding
MTD	mount(ed), (ing)
NAT	natural
NRC	noise reduction coefficient
NOM	nominal
N	north
NIC	not in contract
NTS	not to scale
OC	on center(s)
OPG	opening
OPP	opposite
OA	overall
OH	overhead
PNT	paint(ed)
PNL	panel
PAR	parallel
PBD	particle board
PTN	partition
PED	pedestal
PLAM	plastic laminate
PWD	plywood
PT	point
POL	polished
P/D/T	power/data/telephone
PFAB	prefabricate(d)
PFIN	prefinished
PREP	preparation
QT	quarry tile
RAD	radius
REC	recessed
REF	reference
REQ	require(d)
RES	resilient
RA	return air
REV	revision(s), revised
RH	right hand
RM	room
RO	rough opening
R	riser
SCH	schedule
SEC	section
SEP CIR	separate circuit
SHT	sheet
SIM	similar
SC	solid core
STC	sound transmission class
S	south
SPKR	speaker
SPEC	specification(s)
SQ	square
SF	square feet
SS	stainless steel
STD	standard
STL	steel
SUS	suspended
SYS	system
TKBD	tackboard
TEL	telephone
THK	thick(ness)
T	tread
TOS	top of slab
TYP	typical
UNF	unfinished
UNO	unless noted otherwise
VFY	verify
VIF	verify in field
VERT	vertical
VWC	vinyl wall covering
VT	vinyl tile
V	volt
WSCT	wainscoat
WTW	wall to wall
WH	wall hung
WC	water closet
W	watt
WT	weight
W	west
W	width, wide
W/	with
W/O	without
WD	wood

Project Team

Client:
The District of Columbia Courts
Capital Projects and Facilities
Management Division
616 H Street, NW, Suite 622
Washington, DC 20001
202-879-2801
POC: Judith Hill, Project Manager
Judith.Hill@dcsc.gov

Architect of Record:
IBI Group of Virginia, Inc.
1505 Prince Street, Suite 200
Alexandria Va, 22314
703-836-9600
POC: Peter Boccia
Peter.boccia@ibigroup.com

Mechanical / Electrical / Plumbing Engineering:
SRBR Engineers Inc
757 Frederick Road Suite 300
Catonsville, MD 21228
410-869-7282
POC: Howard Rutherford
hrutherford@srbr.com

Sheet: No.	Title	Revision: 1	2	3	4	5	6	7	8
Architecture									
A-01	Cover Sheet								
A-02	Demolition Plans, New Work Plans, Notes and Details								
Mechanical									
M-30	Mechanical Demo Work and New Work Plans								
Electrical									
E-01	Electrical New Work Plan								
E-02	Electrical New Work RCP								

Typical Switch, Secuity Device and Sensor Placement

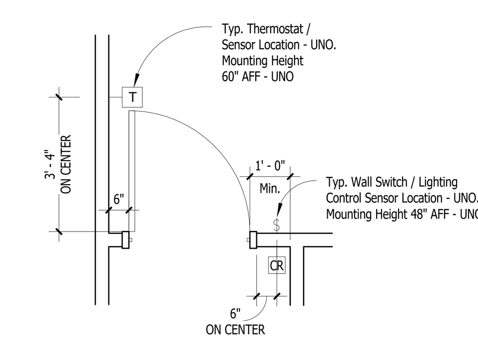

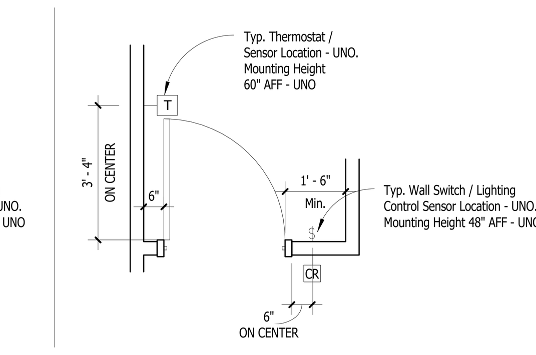

Note: Dimensions apply to all door frame types or cased openings.

ADA Reference

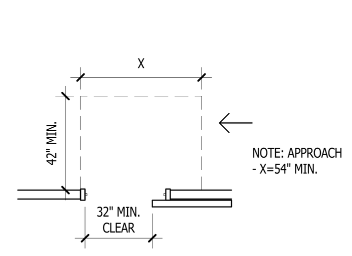

5 Side Approach - Slide Side
Scale : 1/4" = 1'-0"

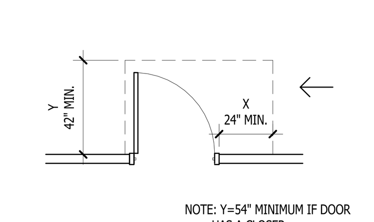

1 Latch Side Approach - Pull Side
Scale : 1/4" = 1'-0"

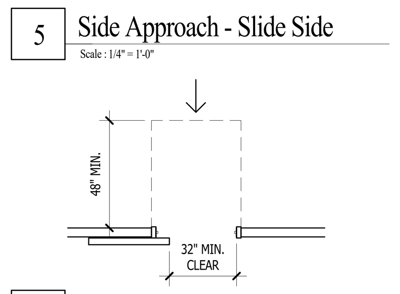

6 Front Approach
Scale : 1/4" = 1'-0"

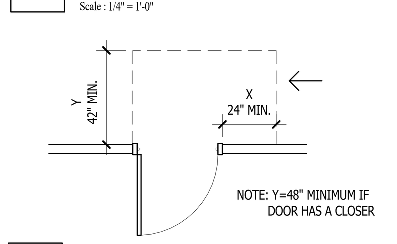

2 Latch Side Approach - Push Side
Scale : 1/4" = 1'-0"

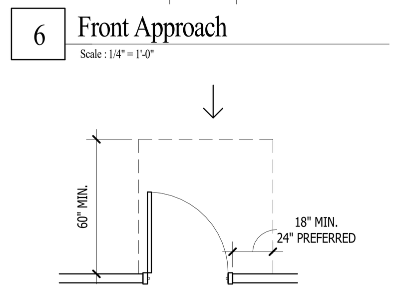

7 Front Approach - Pull Side
Scale : 1/4" = 1'-0"

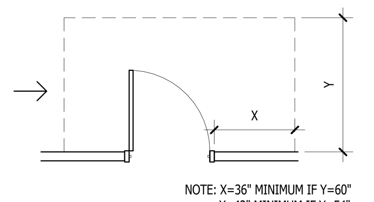

3 Hinge Side Approach - Pull Side
Scale : 1/4" = 1'-0"

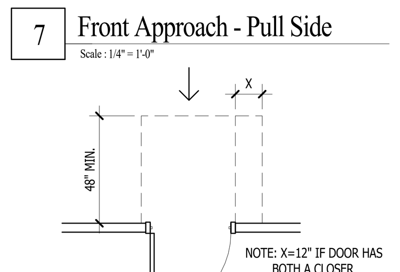

8 Front Approach - Push Side
Scale : 1/4" = 1'-0"

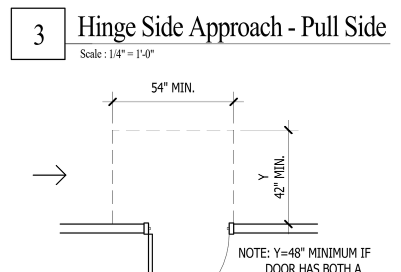

4 Hinge Side Approach - Push Side
Scale : 1/4" = 1'-0"

Partition Type - 3E

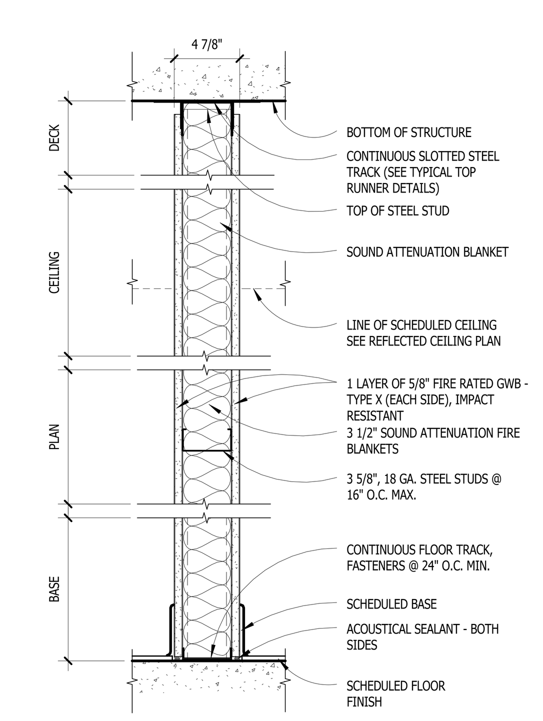

Partition Notes

Description: Slab High with SAFB
Partition Thickness: 4 7/8"
Fire Rating/Test #: N/A
STC Rating: 49-51
Stud Thickness: 3 5/8"
SAFB Insulation Thickness: 3 1/2"

3E Partition Type

Standard Drawing Symbols

Partition Reference — 1A — Partition Type

Furnishing References — 1i — Item Reference for Millwork, Furniture, Equipment, etc.

Keynote Reference — Keynote Reference Number (Prefix may vary)

Finish Reference — x-1 — Finish Type

Revision Reference — 1 — Revision Number

Detail Reference — 1 / A.101 — Drawing Number, Sheet Number

Room Number Reference — 101 — Room Number

Column Grid Reference — 0 — Column Grid Reference Number

Elevation Reference — Top of Steel El: 10'-0" AFF — Description of Mark, Elevation Reference Dimension

Elevation Reference — Ref, 1, A101 — Drawing Number, Sheet Number

Section Reference — Drawing Number, Sheet Number

Door Number Reference — 101 — Door Number. Note: Where multiple suites are part of the Scope, refer to Door Schedule for full Door Number.

Blocking Reference — B — Indicates side(s) of partition to receive wood blocking for wall mounted eqpt. or furniture. If no dimension is given, blocking extends full width of indicated partition.

Hatching Reference — Millwork; Work By Others

Linetype Reference — Hidden Lines or Items Above; Centerlines, Projected Lines

Partition Reference — Existing Partition to Remain; Existing Partition to be Demolished; New Ceilng-High Partition; Slab High Partition

Vicinity Map

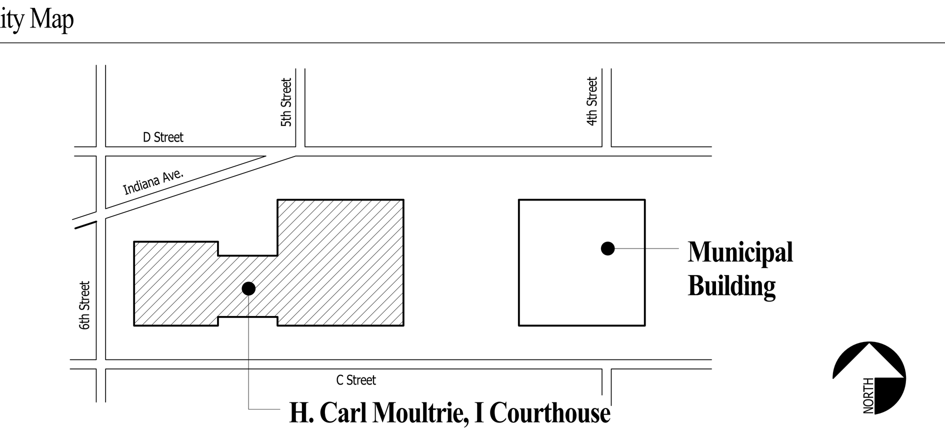

APPROVAL STAMP

CLIENT NAME & LOGO

Fourth Floor East Suite 4475 Renovations

H. Carl Moultrie I Courthouse
500 Indiana Avenue NW
Washington DC 20001

ARCHITECT & ENGINEER NAME & LOGO

IBI GROUP
Architects, Planners & Interior Designers
1505 Prince Street - Suite 200
Alexandria VA 22314-2852 USA
tel 703.836.9600 fax 703.836.2484
ibigroup.com

Mechanical / Electrical / Plumbing Engineer
SRBR Engineers Inc.
757 Frederick Road Suite 300
Catonsville, MD 21228
tel 410.869.7282

PROJECT

Project Title: **Design Intent Documents for Interior Improvement to:** Fourth Floor East Suite 4475 Renovations

Client Name: **District of Columbia Courts Capitol Project and Facilities Management Division**

Building Address: **H. Carl Moultrie I Courthouse 500 Indiana Avenue NW Washington DC 20001**

KEYPLAN

SUBMISSION

ISSUED FOR	DATE
Permit Set	11/8/2019

APPROVALS	DATE

REVISIONS

NO.	DESCRIPTION	DATE	BY

This drawing and the design shown hereon are the property of IBI Group. The reproduction, copying, or other use of the drawing without their written consent is prohibited and any infringement will be subject and any infringement will be subject to legal action.

Accepted By:

Capital Projects and Facilities Management Officer
Contracting Officer
District of Columbia Courts

TITLE

H. Carl Moultrie Courthouse

Cover Sheet

Date: 10/9/2019
Scale: As indicated
Checked by: WL & CPH
Drawn by: AP & DRS
Planned By: W

DISTRICT OF COLUMBIA — PETER C. BOCCIA — No. AR: 5539 — LICENSED ARCHITECT

Digitally signed by Peter C Boccia
Date: 2019.11.08 10:34:49 -05'00'

Contractors to Verify Dimensions on Site. Do Not Scale this Drawing

SHEET

A-01